GRUNDFOS **DATA BOOKLET**

SEV.80.80.11.4.50D.Q

Grundfos pump 97637756

Thank you for your interest in our products. Please contact us for more information, or visit our website

https://www.lenntech.com/grundfos/SEV00/97637756/SEV-80-80-11-4-50D-Q.html

info@lenntech.com
tel. +31 152 610 900
fax. +31 152 616 289

Position	Qty.	Description
	1	**SEV.80.80.11.4.50D.Q**

Note! Product picture may differ from actual product

Product No.: On request

Non-self-priming, single-stage, centrifugal pump designed for handling wastewater, process water and unscreened raw sewage.

The pump is designed for intermittent and continous operation. The liquidless and maintenance free cooling system ensures that the pump can be used for submerged or dry installation. The efficient SuperVortex impeller provides passage of long fibres and solids up to 80 mm and is suitable for wastewater with a dry matter content of up to 5 %.

A unique stainless-steel clamp assembling system enables quick and easy disassembly of the pump from the motor unit for service and inspection. No special tools are required. Pipework connection is via a DIN flange.

Further product details

Typical application is transfer of liquid, such as:

- large quantities of drainage and surface water
- domestic wastewater with discharge from toilets
- wastewater from commercial buildings without discharge from toilets
- sludge-containing industrial wastewater.

The pump is ideal for pumping of the above liquids from for instance:

- municipal network pumping stations
- public buildings
- blocks of flats
- factories/industry.

The pump is suitable for both temporary and permanent installation either as free-standing on ring stand, on base stand, on brackets or on an auto-coupling system.

Pump

The pump is fitted with an easy-to-clean stainless steel motor sleeve (EN 1.4301) that is extremely robust and impact-resistant. Pump housing is made of cast-iron (EN-GJL-250) and the impeller is made of stainless steel (EN 1.4408).

The SuperVortex impeller is a symmetrical multivane winglet impeller. The design ensures a flow entirely outside the impeller providing limited contact between the impeller and the pumped liquid. This ensures that long fibres, rags and more passes freely through the pump without getting caught and without causing clogging or jamming.

The shaft seal consists of two mechanical seals that ensure a reliable sealing between the pumped liquid and motor. The shaft seals are incorporated in a single-unit cartridge shaft seal system that is easy to replace in the field without use of special tools.

The combination of the primary and secondary seals in a cartridge shaft seal system results in a shorter assembly length compared to conventional shaft seals.

- Primary seal: Silicon carbide/silicon carbide (SiC/SiC)

Position	Qty.	Description

- Secondary seal: Carbon/Ceramics

The shaft seal is bidirectional, meaning it operates correctly in case of backflow through the pump.

The pump is approved according to EN12050-1.

Motor

The motor is a watertight, totally encapsulated motor supplied with a 10 m power cable. The stainless steel plug is fastened with a union nut. This nut and the O-rings provide sealing against ingress of the liquid.

The plug is polyurethane-embedded, ensuring a watertight and durable seal around the leads of the cable. This prevents the ingress of water into the motor through the cable in case of cable breakage or adverse handling in connection with installation or service.

A compact motor construction with a short shaft reduces vibrations, resulting in an increased efficiency and lifetime of the shaft seal and ball bearings.

The motor features built-in thermal protection to protect the motor against overheating and ensure the reliability.

A solid-block stator housing with built-in cooling conduits, efficiently transfers excess heat to the pumped liquid via a solid cast intermediate cooling flange, that is in direct contact with the pumped liquid. This allows for continuous operation even in a dry installation. An extremely robust impact-resistant stainless-steel jacket with an easy-to-clean smooth surface is fitted on the top of the solid-block stator housing.

The pump is designed for speed-controlled operation to keep the energy consumption at a minimum. To avoid the risk of sedimentation in the pipes, we recommend that you operate the speed-controlled pump within a speed range of 30 % to 100 % and at a flow rate above 1 m/s.

Controls:

Moisture sensor:	without moisture sensors
Water-in-oil sensor:	without water-in-oil sensor
Temp. sensor:	N

Liquid:

Liquid temperature range:	0 .. 40 °C
Density:	998.2 kg/m³

Technical:

Type of impeller:	SUPER VORTEX
Maximum particle size:	80 mm
Primary shaft seal:	SIC/SIC
Secondary shaft seal:	CARBON/CERAMICS
Max. hydraulic efficiency:	37 %
Approvals on nameplate:	EN12050-1
Curve tolerance:	ISO9906:2012 3B2

Materials:

Pump housing:	EN 1561 EN-GJL-250
Impeller:	Stainless steel

Installation:

Maximum ambient temperature:	40 °C
Maximum operating pressure:	6 bar
Flange standard:	DIN
Pump outlet:	DN 80
Pressure rating:	PN 10
Maximum installation depth:	20 m

Electrical data:

Power input - P1:	1.5 kW
Rated power - P2:	1.1 kW
Mains frequency:	50 Hz
Rated voltage:	3 x 380-415 V

Position	Qty.	Description	
		Voltage tolerance:	+6/-10 %
		Max starts per. hour:	20
		Rated current:	2.8-2.9 A
		Rated current at 3/4 load:	2.4 A
		Rated current at 1/2 load:	2.1 A
		Starting current:	13 A
		Rated current at no load:	1.9 A
		Cos phi - power factor:	0.73
		Cos phi - p.f. at no load:	0.17
		Cos phi - p.f. at 3/4 load:	0.64
		Cos phi - p.f. at 1/2 load:	0.52
		Rated speed:	1440 rpm
		Locked-rotor torque:	15 Nm
		Breakdown torque:	21 Nm
		Moment of inertia:	0.0142 kg m²
		Motor efficiency at full load:	73.2 %
		Motor efficiency at 3/4 load:	71.2 %
		Motor efficiency at 1/2 load:	65.6 %
		Number of poles:	4
		Start. method:	direct-on-line
		Enclosure class (IEC 34-5):	IP68
		Insulation class (IEC 85):	F
		Explosion proof:	no
		Length of cable:	10 m
		Cable type:	LYNIFLEX
		Type of cable plug:	NO PLUG
		Others:	
		Net weight:	95 kg

On request SEV.80.80.11.4.50D.Q 50 Hz

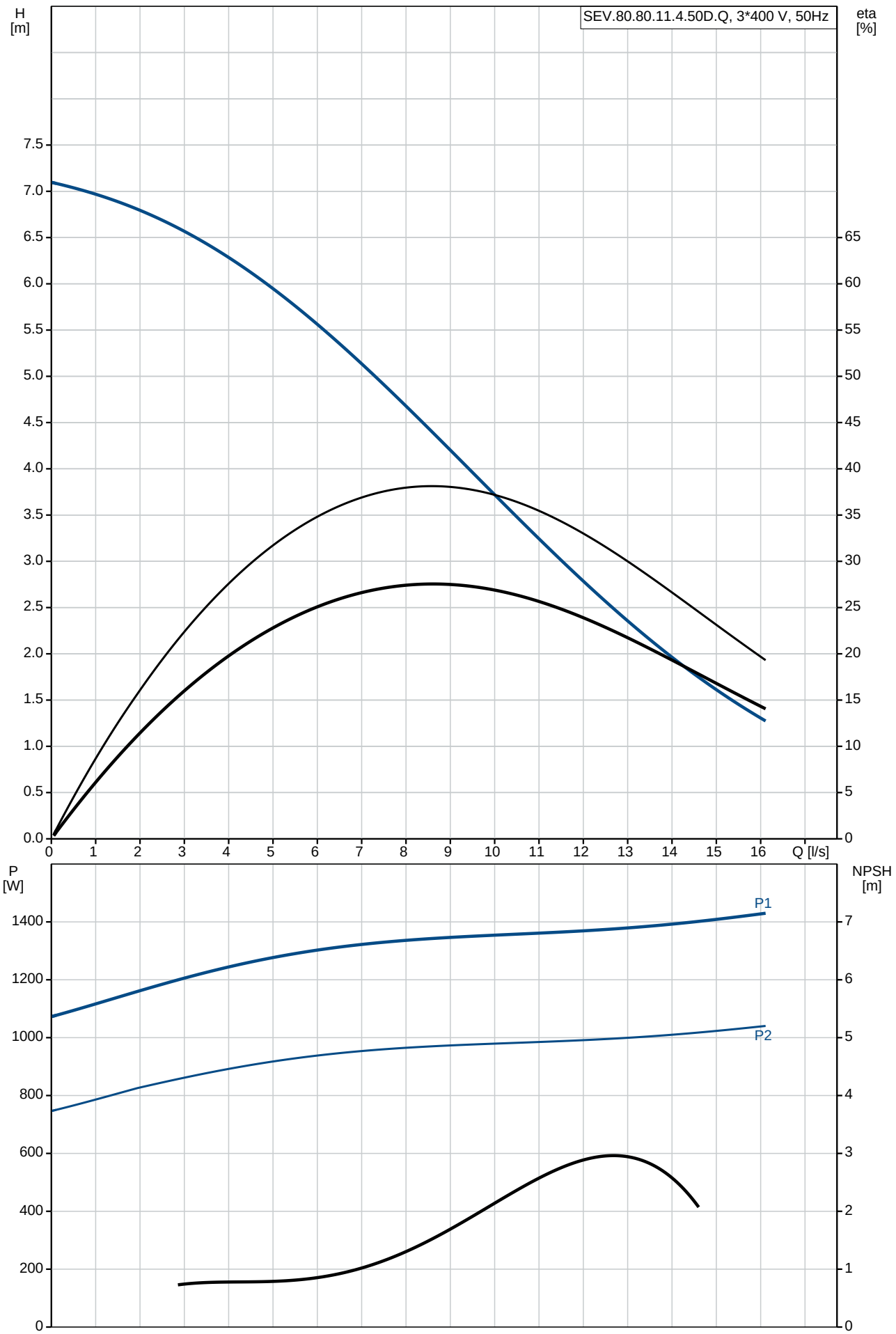

Description	Value
General information:	
Product name:	SEV.80.80.11.4.50D.Q
Product No:	On request
EAN number:	On request
Technical:	
Max flow:	16.1 l/s
Head max:	7.1 m
Type of impeller:	SUPER VORTEX
Maximum particle size:	80 mm
Primary shaft seal:	SIC/SIC
Secondary shaft seal:	CARBON/CERAMICS
Max. hydraulic efficiency:	37 %
Approvals on nameplate:	EN12050-1
Curve tolerance:	ISO9906:2012 3B2
Cooling jacket:	with cooling jacket
Materials:	
Pump housing:	EN 1561 EN-GJL-250
Impeller:	Stainless steel
Installation:	
Maximum ambient temperature:	40 °C
Maximum operating pressure:	6 bar
Flange standard:	DIN
Pump outlet:	DN 80
Pressure rating:	PN 10
Maximum installation depth:	20 m
Inst dry/wet:	DRY/SUBMERGED
Installation:	horizontal or vertical
Liquid:	
Liquid temperature range:	0 .. 40 °C
Density:	998.2 kg/m³
Electrical data:	
Power input - P1:	1.5 kW
Rated power - P2:	1.1 kW
Mains frequency:	50 Hz
Rated voltage:	3 x 380-415 V
Voltage tolerance:	+6/-10 %
Max starts per. hour:	20
Rated current:	2.8-2.9 A
Rated current at 3/4 load:	2.4 A
Rated current at 1/2 load:	2.1 A
Starting current:	13 A
Rated current at no load:	1.9 A
Cos phi - power factor:	0.73
Cos phi - p.f. at no load:	0.17
Cos phi - p.f. at 3/4 load:	0.64
Cos phi - p.f. at 1/2 load:	0.52
Rated speed:	1440 rpm
Locked-rotor torque:	15 Nm
Breakdown torque:	21 Nm
Moment of inertia:	0.0142 kg m²
Motor efficiency at full load:	73.2 %
Motor efficiency at 3/4 load:	71.2 %
Motor efficiency at 1/2 load:	65.6 %
Number of poles:	4
Start. method:	direct-on-line
Enclosure class (IEC 34-5):	IP68
Insulation class (IEC 85):	F
Explosion proof:	no
Motor protec:	THERMAL SWITCH
Thermal protec:	internal
Length of cable:	10 m
Cable type:	LYNIFLEX
Type of cable plug:	NO PLUG
Controls:	

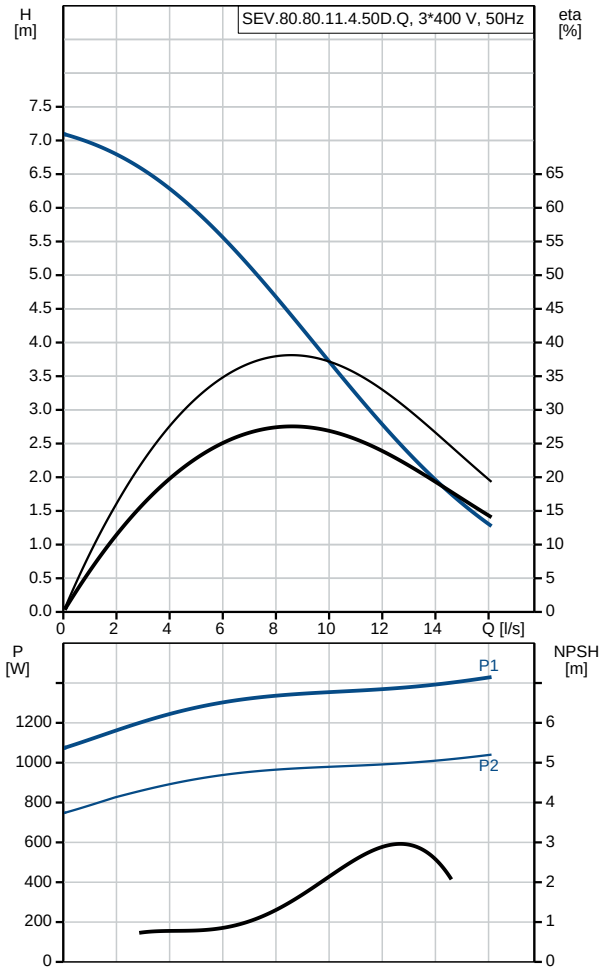

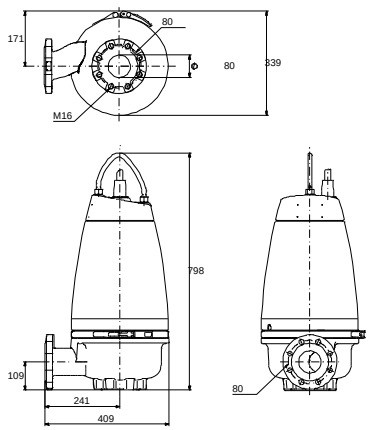

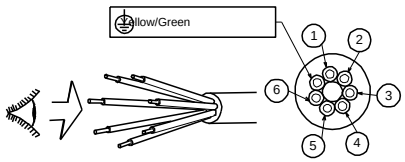

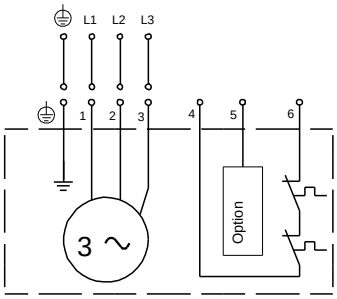

Description	Value
Control box:	not included
Moisture sensor:	without moisture sensors
Water-in-oil sensor:	without water-in-oil sensor
Temp. sensor:	N
Others:	
Net weight:	95 kg

On request SEV.80.80.11.4.50D.Q 50 Hz

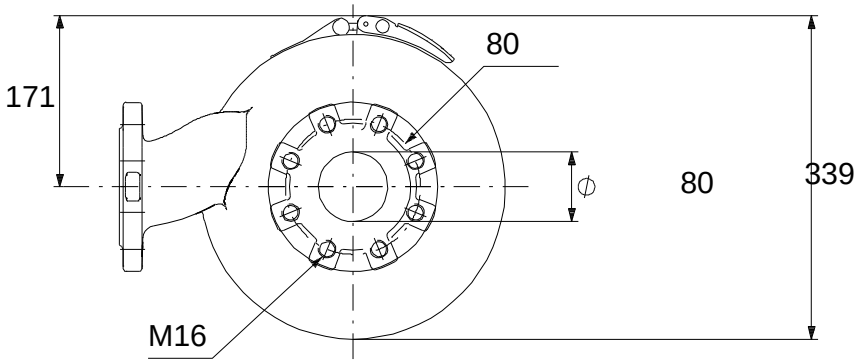

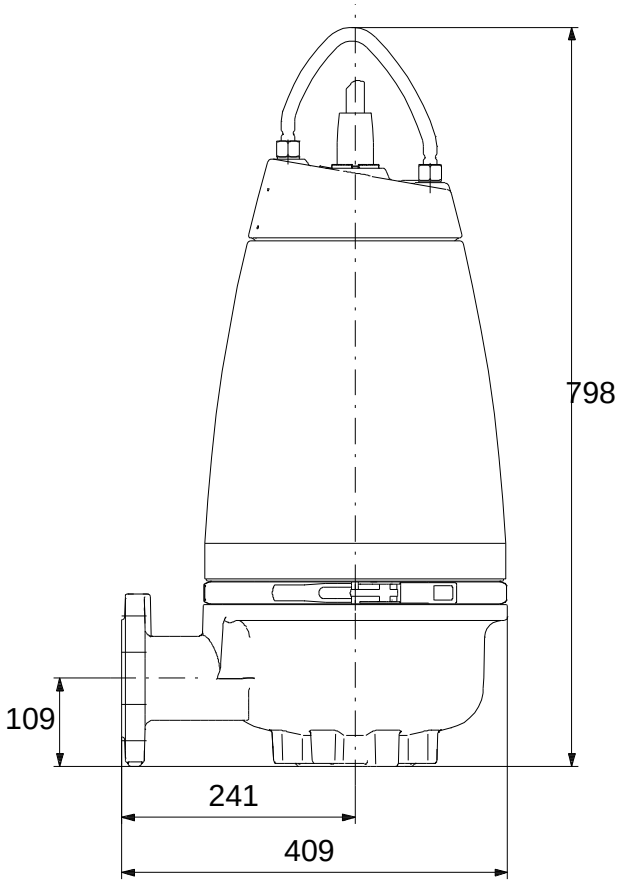

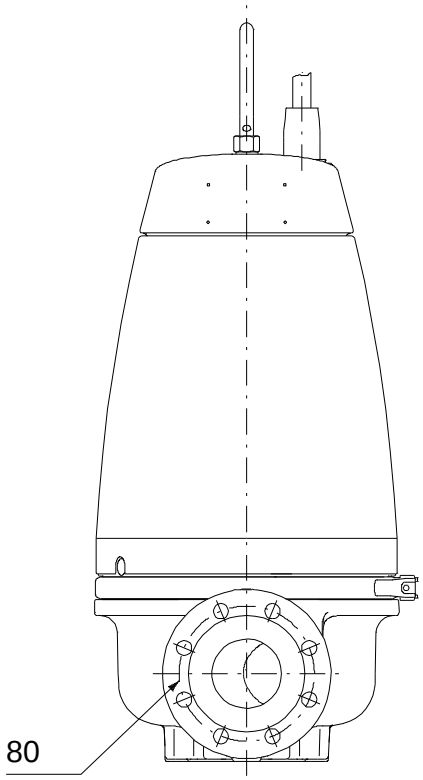

Note! All units are in [mm] unless others are stated.
Disclaimer: This simplified dimensional drawing does not show all details.

On request SEV.80.80.11.4.50D.Q 50 Hz

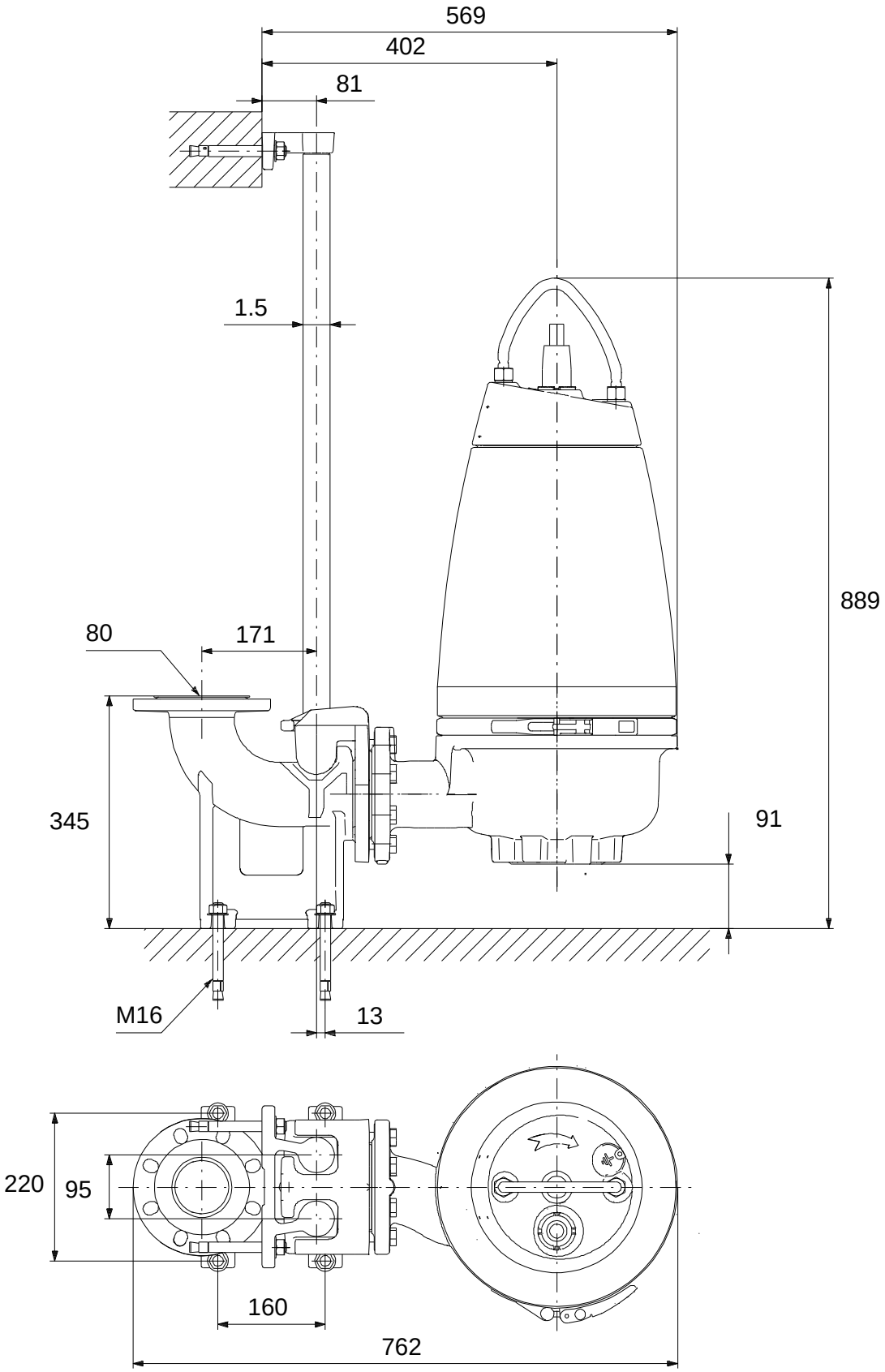

Note! All units are in [mm] unless others are stated.
Disclaimer: This simplified dimensional drawing does not show all details.

On request SEV.80.80.11.4.50D.Q 50 Hz

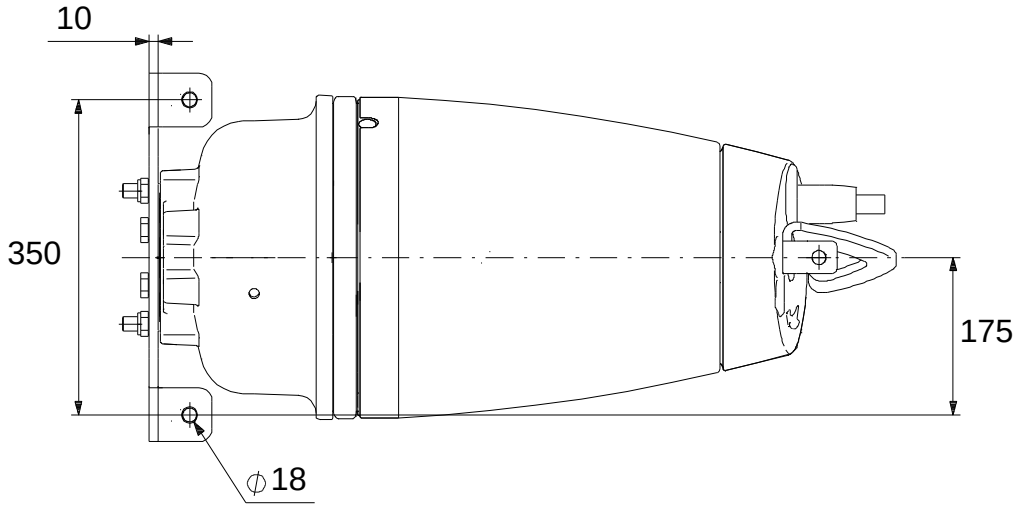

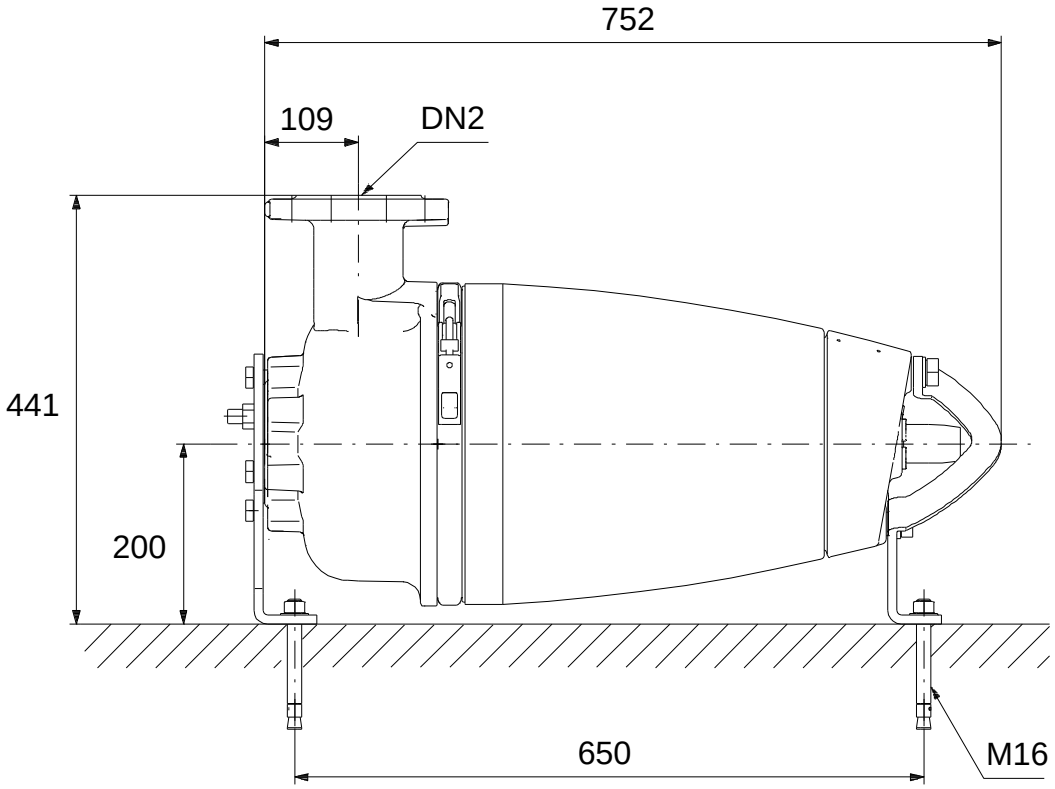

Note! All units are in [mm] unless others are stated.
Disclaimer: This simplified dimensional drawing does not show all details.

On request SEV.80.80.11.4.50D.Q 50 Hz

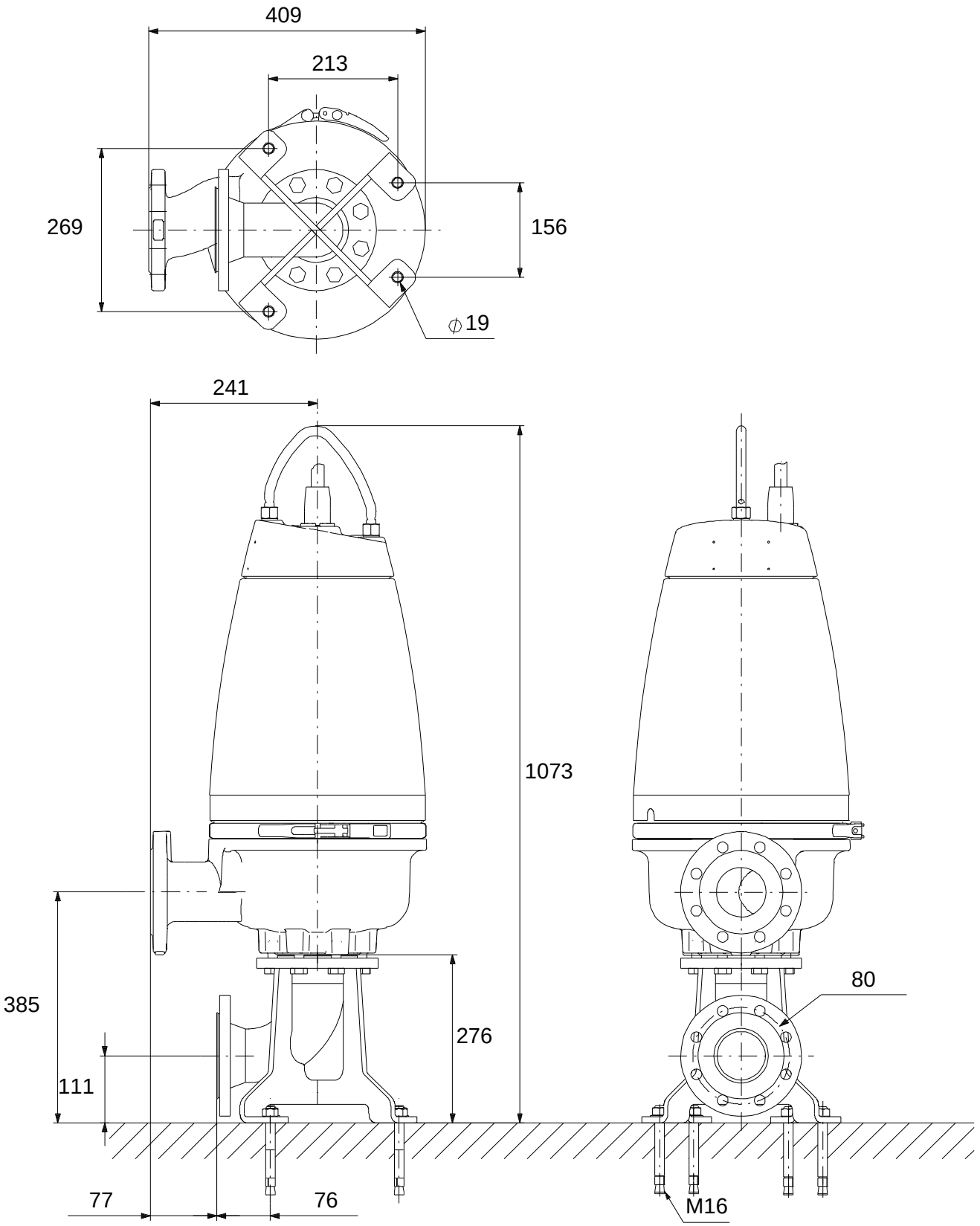

Note! All units are in [mm] unless others are stated.
Disclaimer: This simplified dimensional drawing does not show all details.

On request SEV.80.80.11.4.50D.Q 50 Hz

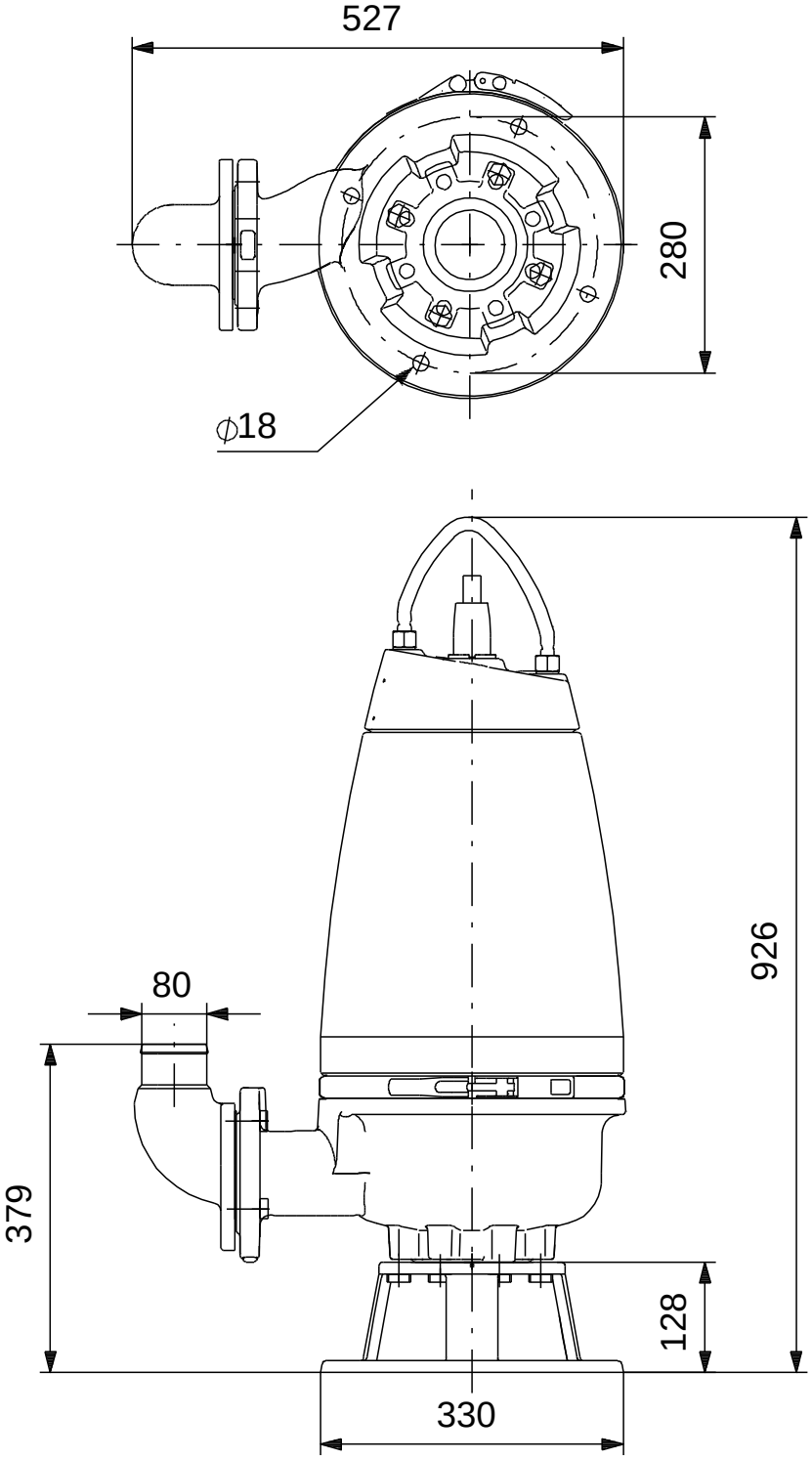

Note! All units are in [mm] unless others are stated.
Disclaimer: This simplified dimensional drawing does not show all details.

Exploded view

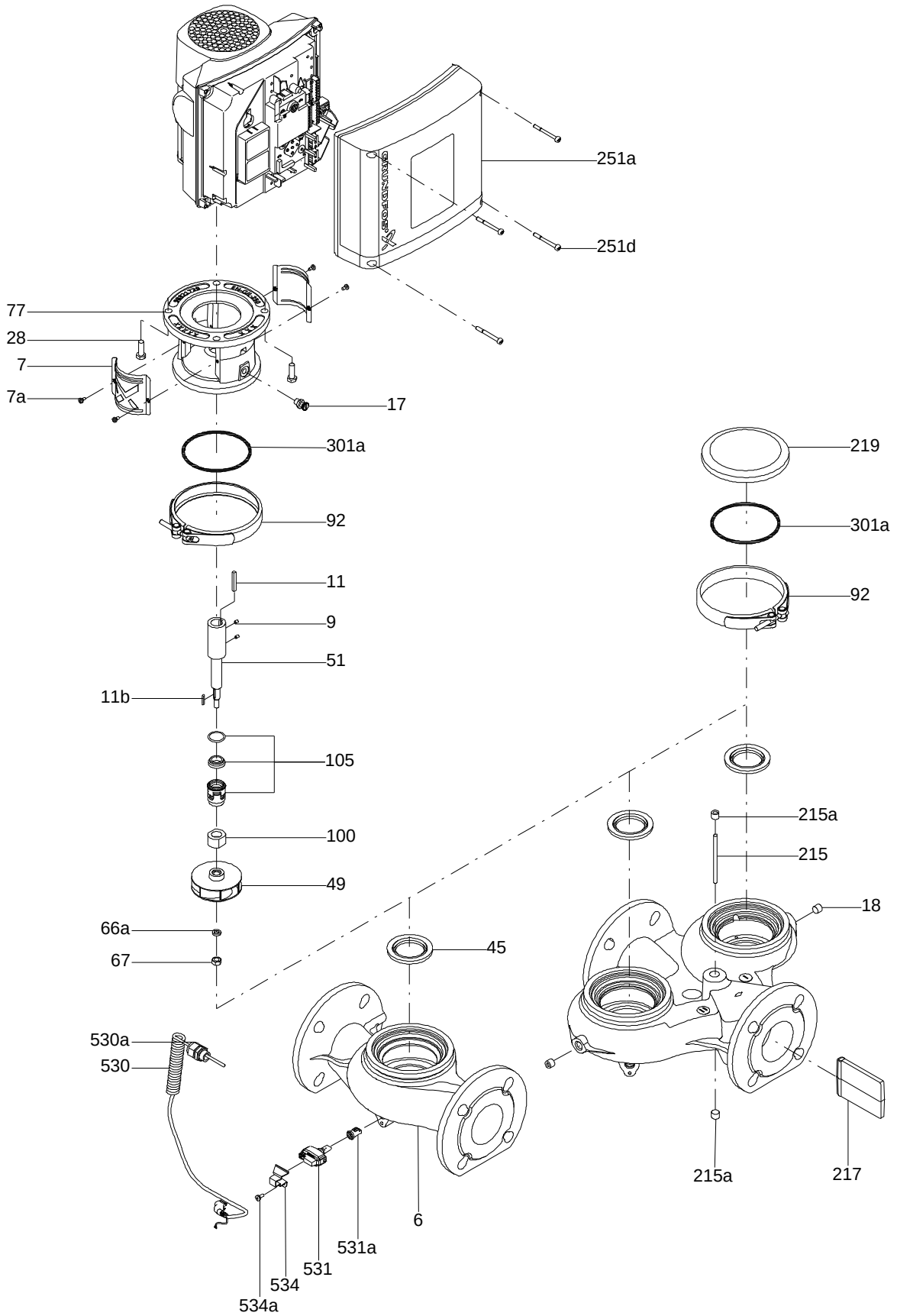

Sectional drawing (TM058200 for TPE2,TPE3)

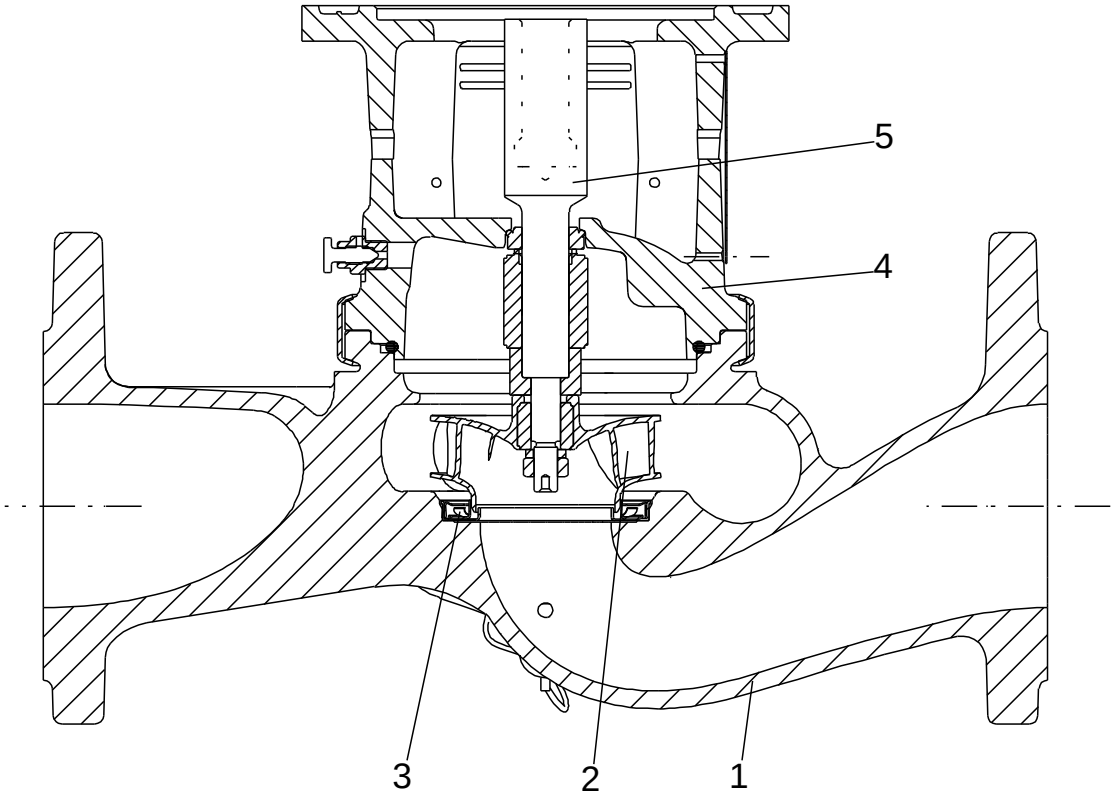

TM058200

Exploded view (TM057026 for MGE model H/I)

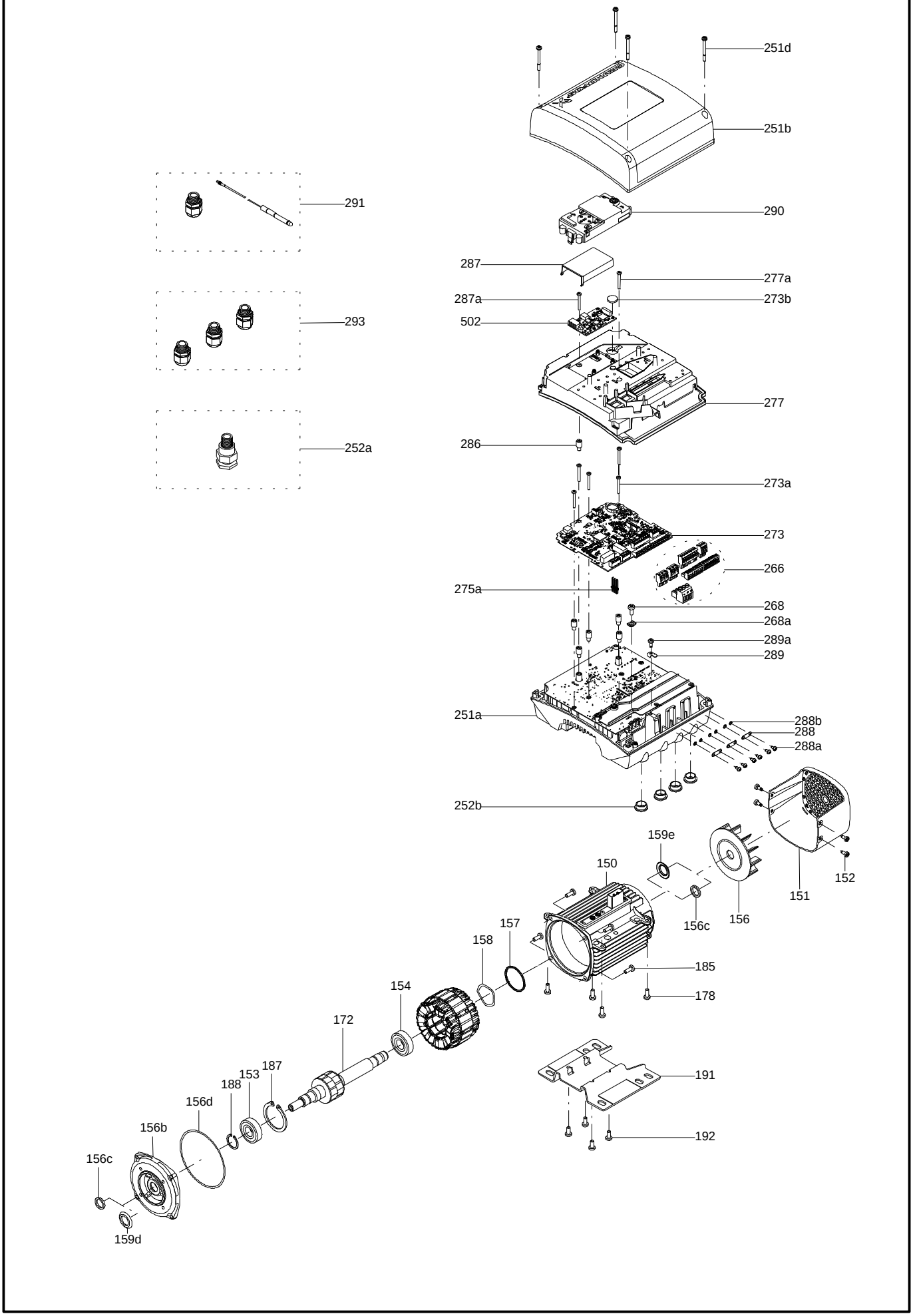

Parts list SEV.80.80.11.4.50D.Q, Product No. On request
Valid from 3.5.2004 (0419)

	Pos	Description	Annotation	Données de classification	Référence	Quantité	Unité
		Clamp				2	pcs
		Pin connector				1	pcs
		Earth connector				1	pcs
		Thermotransfer foil				0	M
		Thermotransfer foil				0	M
	6a	Pin				1	pcs
	7a	Rivet				4	pcs
	9a	Parallel key		Dimension: 5X5X16		1	pcs
	37	O-ring		Diameter: 250		1	pcs
				Material type: NBR70			
				Thickness: 4			
	37a	O-ring		Diameter: 285		2	pcs
				Material type: NBR70			
				Thickness: 4			
	37b	O-ring		Diameter: 185		1	pcs
				Material type: NBR			
				Thickness: 4			
	48	Stator				1	pcs
	49	Impeller				1	pcs
	50	Pump housing				1	pcs
	55	Stator housing				1	pcs
	58	Cover for oil chamber				1	pcs
	59	Bearing cover				1	pcs
	60	Bearing retainer				1	pcs
	61	Bearing retainer				1	pcs
	66	Washer		Internal diameter: 10.5		1	pcs
				Outer diameter: 25			
				Thickness: 3			
	76	Nameplate				1	pcs
+	92	Strap cpl.				1	pcs
	102	Retaining ring				1	pcs
-	105	Shaft seal				1	pcs
		Shaft seal				1	
		Shaft seal				1	
		Shaft seal				1	
		Retaining ring				1	
		Shaft seal, rotating part				1	
		Shaft seal, rotating part				1	
		Shaft seal, stationary part				1	
		Shaft seal, stationary part				1	
	106	O-ring		Diameter: 50		2	
				Material type: NBR			
				Thickness: 3			
	107	O-ring		Diameter: 110		1	pcs
				Material type: NBR70			
				Thickness: 3			
	108	O-ring		Diameter: 80		1	pcs
				Material type: NBR70			
				Thickness: 3			
	109	O-ring		Diameter: 80		1	pcs
				Material type: NBR70			
				Thickness: 3			
	150	Motor sleeve				1	pcs
	151	Motor cover				1	pcs
	153	Ball bearing				1	pcs
	153b	O-ring				1	pcs
	154	Ball bearing		Designation: 6304.2Z.C3.SYN		1	pcs
	155	Flange				1	pcs
	157	Waved washer				1	pcs

	Pos	Description	Annotation	Données de classification	Référence	Quantité	Unité
	158	Waved washer				1	pcs
	159	O-ring		Diameter: 34		1	pcs
				Material type: NBR70			
				Thickness: 4			
	172	Shaft w/rotor				1	pcs
	174a	Lock washer				1	pcs
	177	Plug protector				1	pcs
	177	Hex socket head cap screw				1	pcs
-	181	Cable cpl.				1	pcs
	198	O-ring		Diameter: 34.2		1	
				Material type: NBR			
				Thickness: 3			
	183	Hex socket head cap screw		Length (mm): 40		1	pcs
				Thread: M24			
	183a	Washer		Internal diameter: 26		1	pcs
				Outer diameter: 34			
				Thickness: 2			
	184	Hex socket head cap screw		Designation: DIN 912		6	pcs
				Length (mm): 40			
				Thread: M10			
	184a	Washer		Internal diameter: 10.5		6	pcs
				Outer diameter: 18			
				Thickness: 1.6			
	186	Hex socket head cap screw				2	pcs
	187	Hex socket head cap screw				4	pcs
	188	Hex socket head cap screw				4	pcs
	188a	Hex socket head cap screw		Designation: DIN 912		1	pcs
				Length (mm): 25			
				Thread: M10			
	190	Lifting bracket				1	pcs
	190a	Rubber bush				2	pcs
	192	Cooling paste				12	G
	193	Hex socket head cap screw		Designation: A2-70		2	pcs
				Length (mm): 20			
				Thread: M12			
	193a	Oil				0	L
	194	Washer		Internal diameter: 19		2	pcs
				Outer diameter: 12.2			
				Thickness: 4.4			
	1031	Connector pin				6	pcs

Disclaimer: The information about the Grundfos pump in this document may be outdated.
Data may be subject to alterations without further notice.
Please contact us to verify the data above is still accurate/up-to-date.

All information is copyright Grundfos.

info@lenntech.com
https://www.lenntech.com
tel. +31 152 610 900
fax. +31 152 616 289