GRUNDFOS **DATA BOOKLET**

DWK.E.10.100.220.5.1D.R

Grundfos pump 96922747

Thank you for your interest in our products. Please contact us for more information, or visit our website

https://www.lenntech.com/grundfos/DWK000/96922747/DWK-E-10-100-220-5-1D-R.html

info@lenntech.com
tel. +31 152 610 900
fax. +31 152 616 289

Position	Qty.	Description
	1	**DWK.E.10.100.220.5.1D.R**

Note! Product picture may differ from actual product

Product No.: On request

Submersible Contractor Pump

Grundfos DWK pump is a submersible pump for dewatering and drainage applications.

The pump is suitable for pumping
·water with dirt from drainage pits
·water with sand from construction sites, excavation sites and tunnels

The pump design makes it suitable for both temporary and permanent installation.

The pump is cast iron, with vertical discharge port and integrated submersible 3-phase totally enclosed motor in insulation class F (155°C).

The pump has a rise pipe, a cooling jacket for continuous cooling of the motor by the pumped liquid and a high chrome stainless steel enclosed impeller to ensure high efficiency and maintained performance.

The pump is equipped with a double mechanical seal and an additional lip seal that prevents the shaft and the mechanical seal from abrasives.

The pump is equipped with a temperature bi-metal sensor for motor protection in case of overheating and electrode seal sensor to detect water penetration in to the motor housing.

The pump is fitted with suction strainer and 10 m cable.

The cable sealing consist of a rubber bushing, epoxy and rubber cover that eliminates the risk of water penetration in to the motor.

The pump is equipped with a hose coupling discharge.

Controls:

Seal sensor:	Y

Liquid:

Liquid temperature range:	0 .. 40 °C
Density:	998.2 kg/m³

Technical:

Actual impeller diameter:	250 mm
Type of impeller:	E
Maximum particle size:	10 mm
Primary shaft seal:	SIC-SIC
Secondary shaft seal:	CERAMIC-CARBON
Max. hydraulic efficiency:	53 %

Position	Qty.	Description	
		Curve tolerance:	ISO9906:2012 3B
		Materials:	
		Pump housing:	Cast iron EN1561 EN-GJL-200
		Impeller:	high-chrome stainless steel DIN W.-Nr. HI-CR
		Motor:	Cast iron EN1561 EN-GJL-200
		Installation:	
		Maximum ambient temperature:	40 °C
		Pump outlet:	DN 100
		Maximum installation depth:	25 m
		Electrical data:	
		Rated power - P2:	22 kW
		Mains frequency:	50 Hz
		Rated voltage:	3 x 380-415 V
		Voltage tolerance:	+5/-5 %
		Max starts per. hour:	18
		Rated current:	43 A
		Rated current at 3/4 load:	34 A
		Rated current at 1/2 load:	25 A
		Cos phi - power factor:	0.855
		Cos phi - p.f. at 3/4 load:	0.824
		Cos phi - p.f. at 1/2 load:	0.747
		Rated speed:	2850 rpm
		Motor efficiency at full load:	89.2 %
		Motor efficiency at 3/4 load:	88.6 %
		Motor efficiency at 1/2 load:	86.7 %
		Number of poles:	2
		Start. method:	star/delta
		Enclosure class (IEC 34-5):	IP68
		Insulation class (IEC 85):	F
		Explosion proof:	no
		Length of cable:	10 m
		Cable type:	TP90/TP90
		Others:	
		Net weight:	408 kg

On request DWK.E.10.100.220.5.1D.R 50 Hz

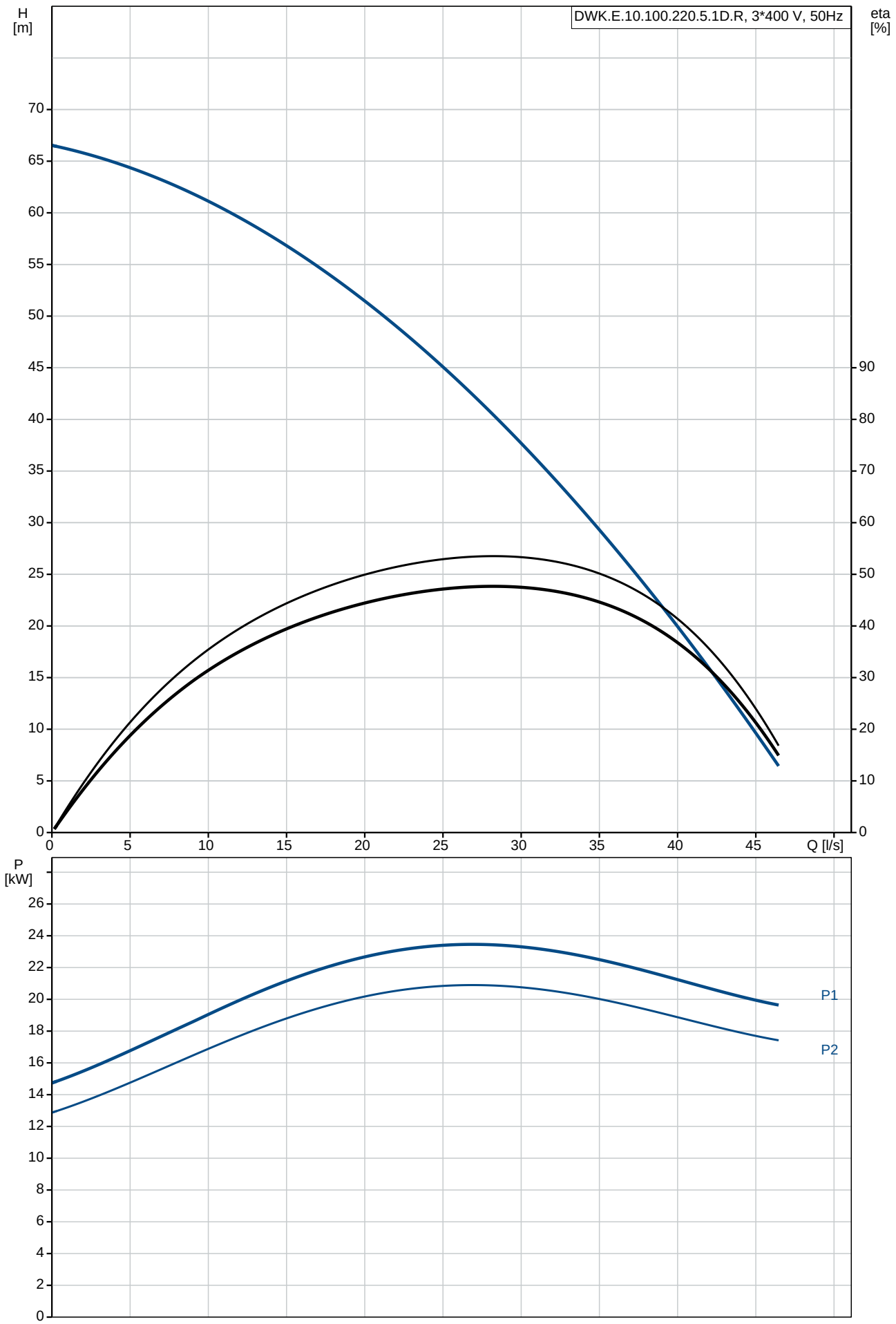

Description	Value
General information:	
Product name:	DWK.E.10.100.220.5.1D.R
Product No:	On request
EAN number:	On request
Technical:	
Max flow:	46.5 l/s
Head min:	6.17 m
Head max:	66.5 m
Actual impeller diameter:	250 mm
Type of impeller:	E
Maximum particle size:	10 mm
Primary shaft seal:	SIC-SIC
Secondary shaft seal:	CERAMIC-CARBON
Max. hydraulic efficiency:	53 %
Curve tolerance:	ISO9906:2012 3B
Materials:	
Pump housing:	Cast iron
	EN1561 EN-GJL-200
Impeller:	high-chrome stainless steel
	DIN W.-Nr. HI-CR
Motor:	Cast iron
	EN1561 EN-GJL-200
Installation:	
Maximum ambient temperature:	40 °C
Pump outlet:	DN 100
Maximum installation depth:	25 m
Liquid:	
Liquid temperature range:	0 .. 40 °C
Density:	998.2 kg/m³
Min. pH-value:	4
Electrical data:	
Rated power - P2:	22 kW
Mains frequency:	50 Hz
Rated voltage:	3 x 380-415 V
Voltage tolerance:	+5/-5 %
Max starts per. hour:	18
Rated current:	43 A
Rated current at 3/4 load:	34 A
Rated current at 1/2 load:	25 A
Cos phi - power factor:	0.855
Cos phi - p.f. at 3/4 load:	0.824
Cos phi - p.f. at 1/2 load:	0.747
Rated speed:	2850 rpm
Motor efficiency at full load:	89.2 %
Motor efficiency at 3/4 load:	88.6 %
Motor efficiency at 1/2 load:	86.7 %
Number of poles:	2
Start. method:	star/delta
Enclosure class (IEC 34-5):	IP68
Insulation class (IEC 85):	F
Explosion proof:	no
Length of cable:	10 m
Cable type:	TP90/TP90
Cable size:	7X6.0MM2+6X1MM2
Controls:	
Seal sensor:	Y
Sensor type:	BI-METAL
Others:	
Net weight:	408 kg

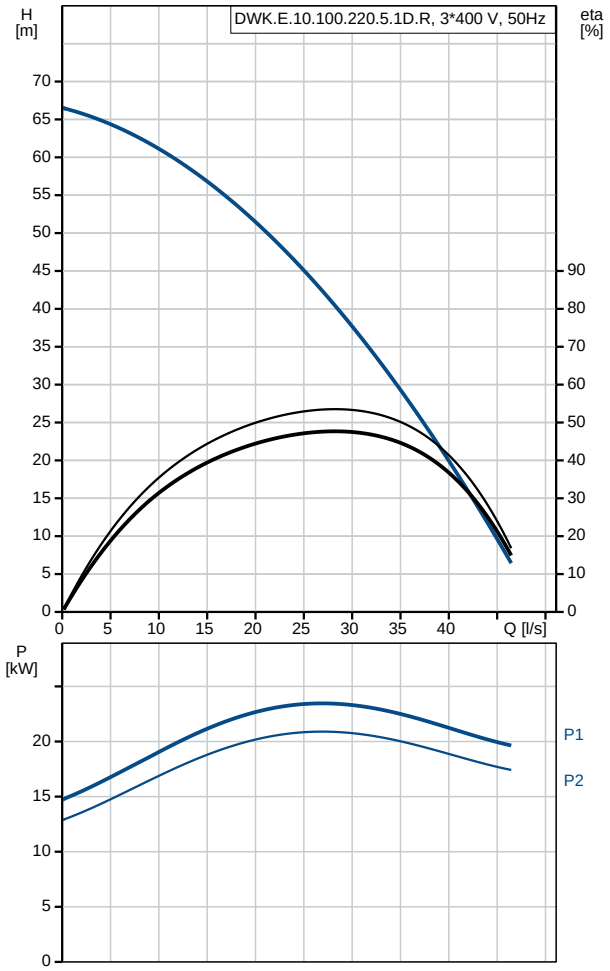

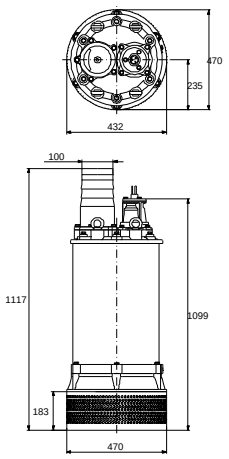

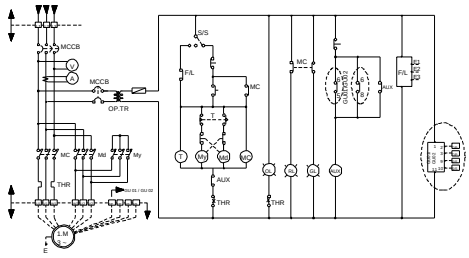

On request DWK.E.10.100.220.5.1D.R 50 Hz

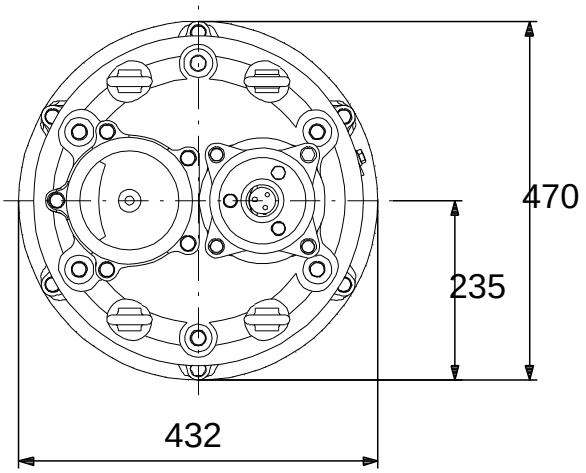

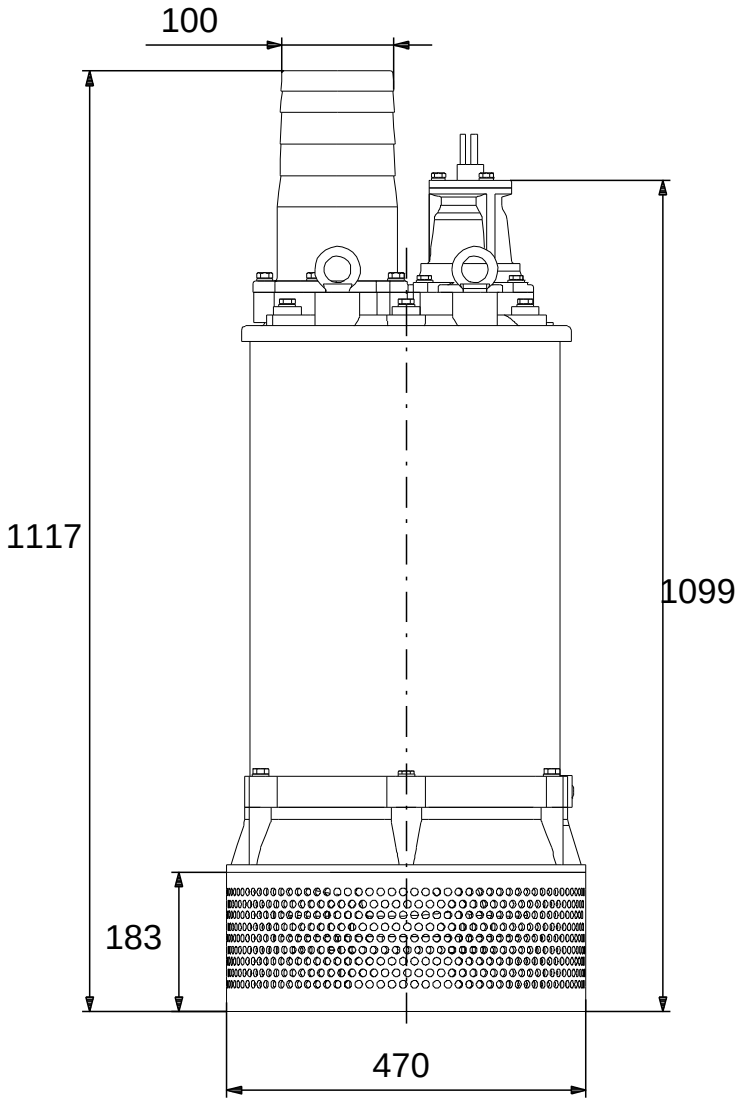

Note! All units are in [mm] unless others are stated.
Disclaimer: This simplified dimensional drawing does not show all details.

Exploded view

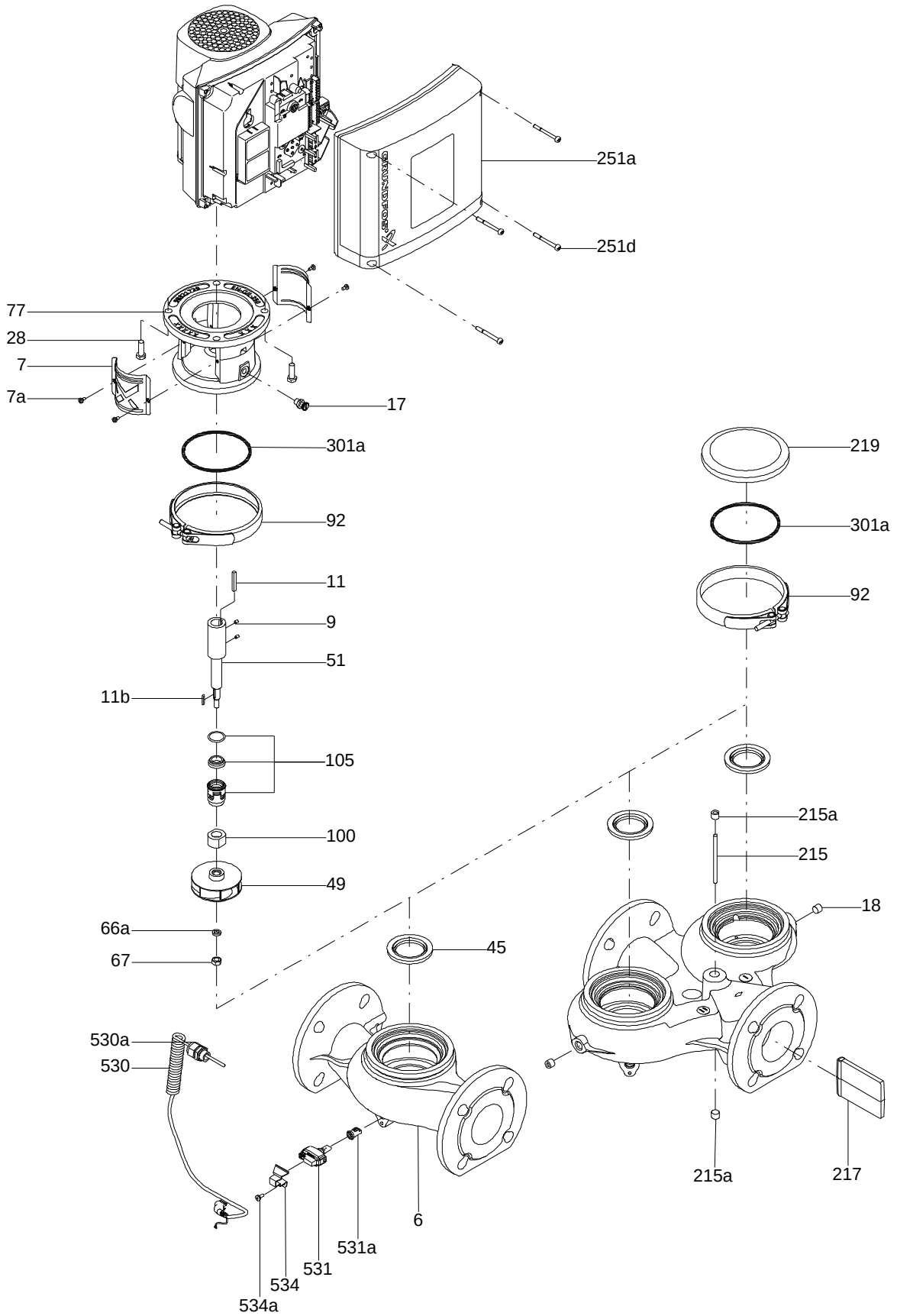

Sectional drawing (TM058200 for TPE2,TPE3)

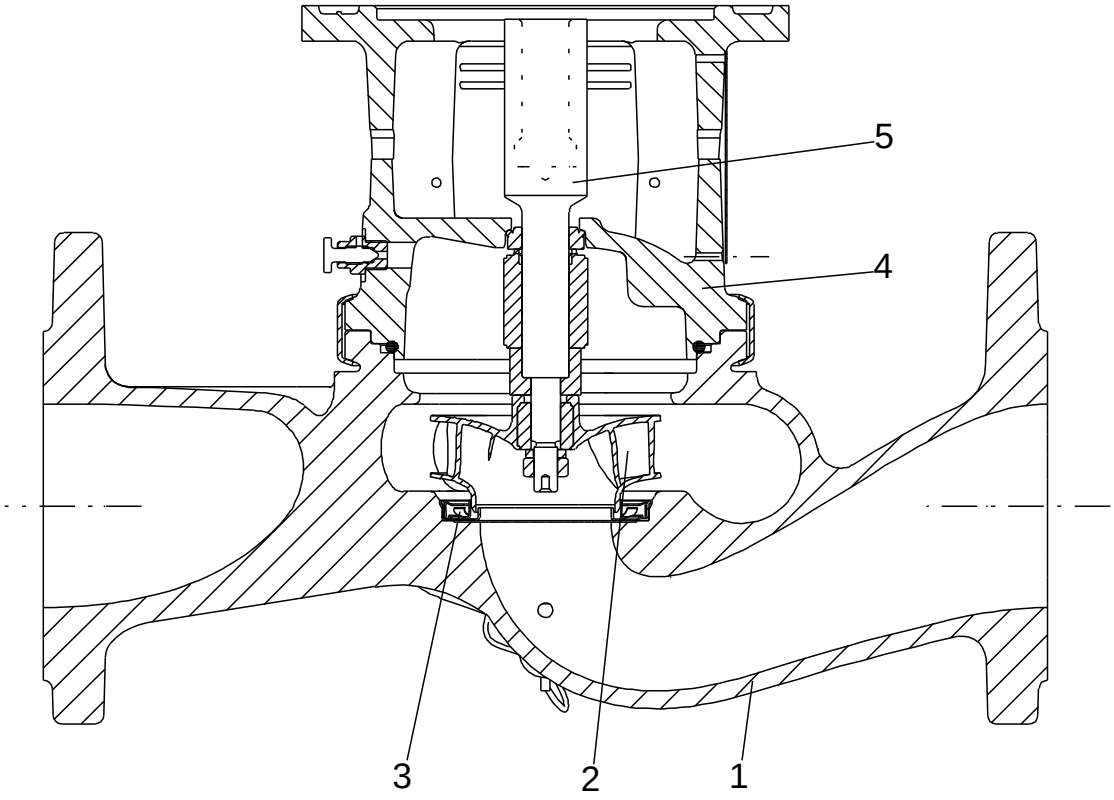

TM058200

Exploded view (TM057026 for MGE model H/I)

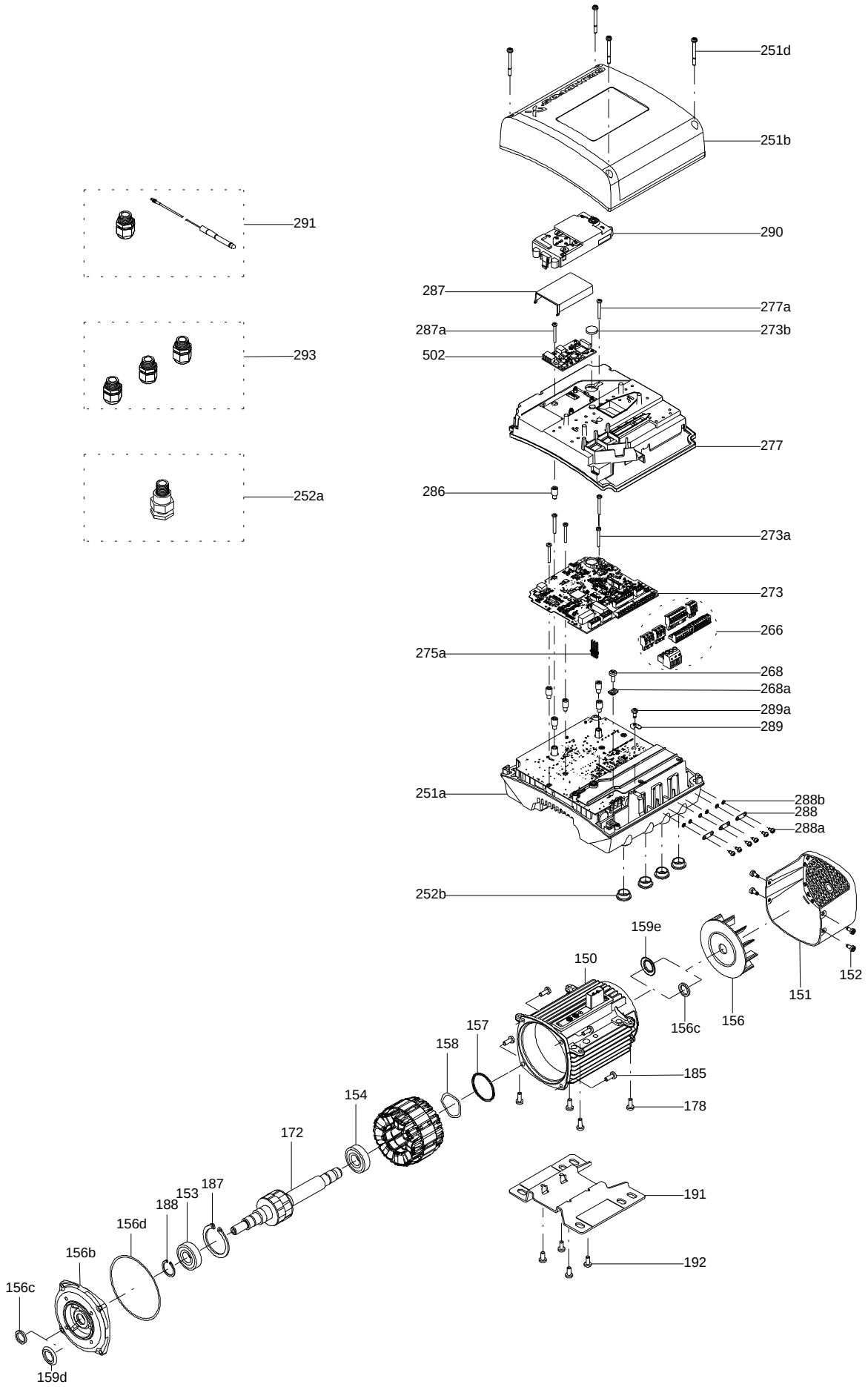

Parts list DWK.E.10.100.220.5.1D.R, Product No. On request
Valid from 1.5.2009 (0918)

Pos	Description	Annotation	Données de classification	Référence	Quantité	Unité
50	Pump housing				1	pcs
55	Frame				1	pcs
60	Bearing housing				1	pcs
84a	Strainer				1	pcs
151	Bracket				1	pcs
190d	Eyebolt				1	pcs

Disclaimer: The information about the Grundfos pump in this document may be outdated.
Data may be subject to alterations without further notice.
Please contact us to verify the data above is still accurate/up-to-date.

All information is copyright Grundfos.

info@lenntech.com
https://www.lenntech.com
tel. +31 152 610 900
fax. +31 152 616 289