GRUNDFOS **DATA BOOKLET**

SQ 2- 55 0.70kW 200-240V 50/60Hz 60M

Grundfos pump 96524433

Thank you for your interest in our products. Please contact us for more information, or visit our website

https://www.lenntech.com/grundfos/SQC02/96524433/SQ-2-55.html

info@lenntech.com
tel. +31 152 610 900
fax. +31 152 616 289

Position	Qty.	Description
	1	**SQ 2-55**

Note! Product picture may differ from actual product

Product No.: On request

3" multi-stage, submersible pump designed for domestic water supply, liquid transfer in tanks, irrigation and environmental applications. The pump has "floating" impellers, each with its own tungsten carbide/ceramic bearing.

The pump features soft starting and protection against dry-running, upthrust, overvoltage, undervoltage, overload and overtemperature.

The motor is a single-phase motor of the permanent magnet rotor type ensuring optimum efficiency within a wide load range.

The motor is fitted with a replaceable end cover with socket.

Liquid:

Pumped liquid:	Water
Maximum liquid temperature:	35 °C
Max liquid t at 0.15 m/sec:	35 °C
Liquid temperature during operation:	20 °C
Density:	998.2 kg/m³

Technical:

Rated flow:	2 m³/h
Rated head:	54 m
Approvals on motor nameplate:	CE,UL,CUL
Curve tolerance:	ISO9906:2012 3B

Materials:

Pump:	Polyamide / Stainless steel DIN W.-Nr. 1.4301 AISI 304
Impeller:	Polyamide
Motor:	Stainless steel DIN W.-Nr. 1.4301 AISI 304

Installation:

Pump outlet:	Rp 1 1/4
Minimum borehole diameter:	76 mm

Electrical data:

Motor type:	MS3
Power input - P1:	1.02 kW
Rated power - P2:	0.7 kW
Mains frequency:	50 Hz
Rated voltage:	1 x 200-240 V
Rated current:	5.2 A
Power factor:	1.00
Rated speed:	10700 rpm
Start. method:	direct-on-line

Position	Qty.	Description
		Enclosure class (IEC 34-5): IP68 Insulation class (IEC 85): F Length of cable: 60 m **Others:** Net weight: 12.7 kg Gross weight: 23.1 kg

On request SQ 2-55 50 Hz

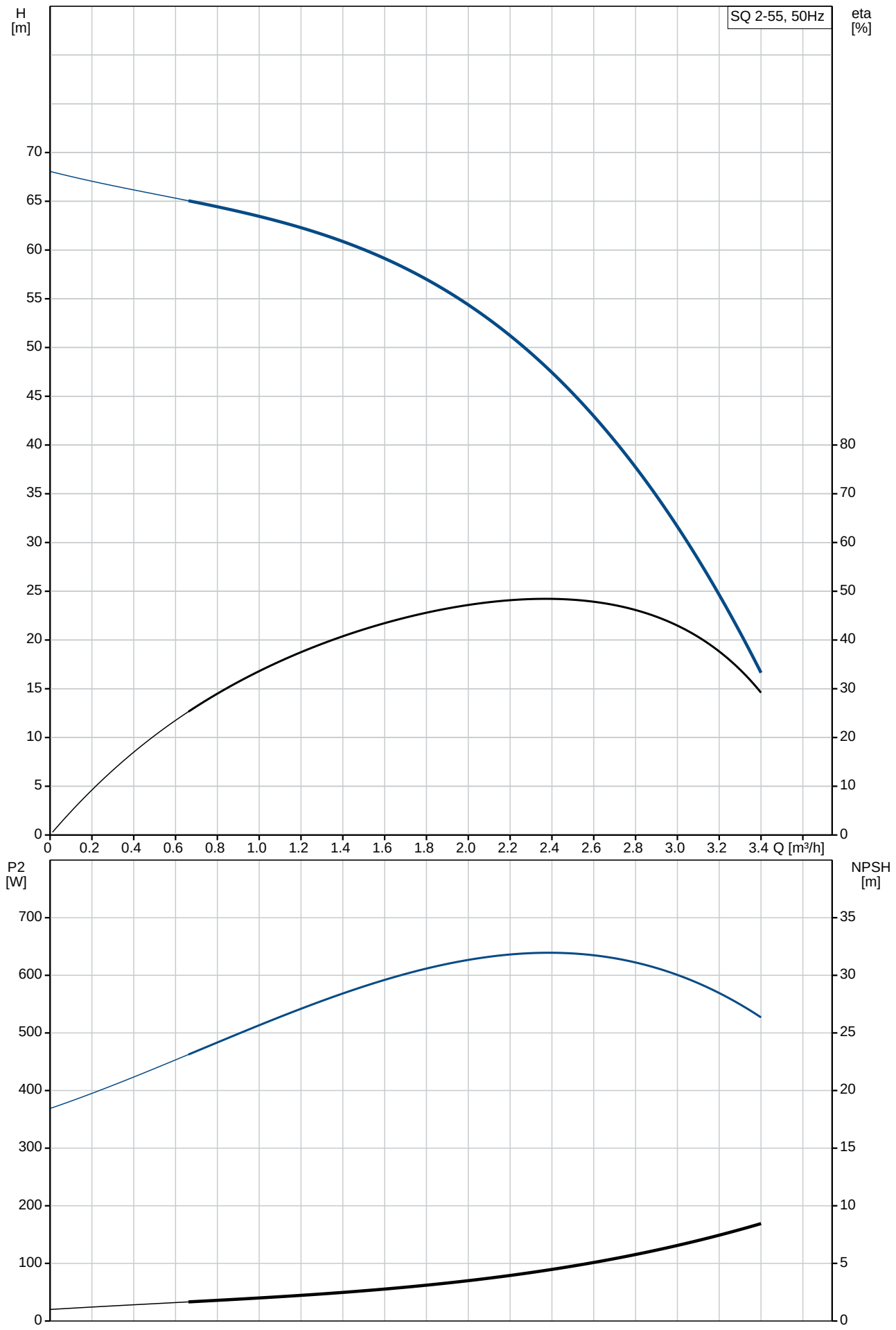

Description	Value
General information:	
Product name:	SQ 2-55
Product No:	On request
EAN number:	On request
Technical:	
Rated flow:	2 m³/h
Rated head:	54 m
Stages:	3
Approvals on motor nameplate:	CE,UL,CUL
Curve tolerance:	ISO9906:2012 3B
Pump No:	96080385
Model:	B
Valve:	pump with built-in non-return valve
Materials:	
Pump:	Polyamide / Stainless steel
	DIN W.-Nr. 1.4301
	AISI 304
Impeller:	Polyamide
Motor:	Stainless steel
	DIN W.-Nr. 1.4301
	AISI 304
Installation:	
Pump outlet:	Rp 1 1/4
Minimum borehole diameter:	76 mm
Liquid:	
Pumped liquid:	Water
Maximum liquid temperature:	35 °C
Max liquid t at 0.15 m/sec:	35 °C
Liquid temperature during operation:	20 °C
Density:	998.2 kg/m³
Electrical data:	
Motor type:	MS3
Power input - P1:	1.02 kW
Rated power - P2:	0.7 kW
Mains frequency:	50 Hz
Rated voltage:	1 x 200-240 V
Rated current:	5.2 A
Power factor:	1.00
Rated speed:	10700 rpm
Start. method:	direct-on-line
Enclosure class (IEC 34-5):	IP68
Insulation class (IEC 85):	F
Motor protec:	Y
Thermal protec:	internal
Length of cable:	60 m
Motor No:	96160570
Controls:	
CU 300/CU 301:	no communication possible
Others:	
Net weight:	12.7 kg
Gross weight:	23.1 kg
Sales region:	EU/S-AMREG/APREG

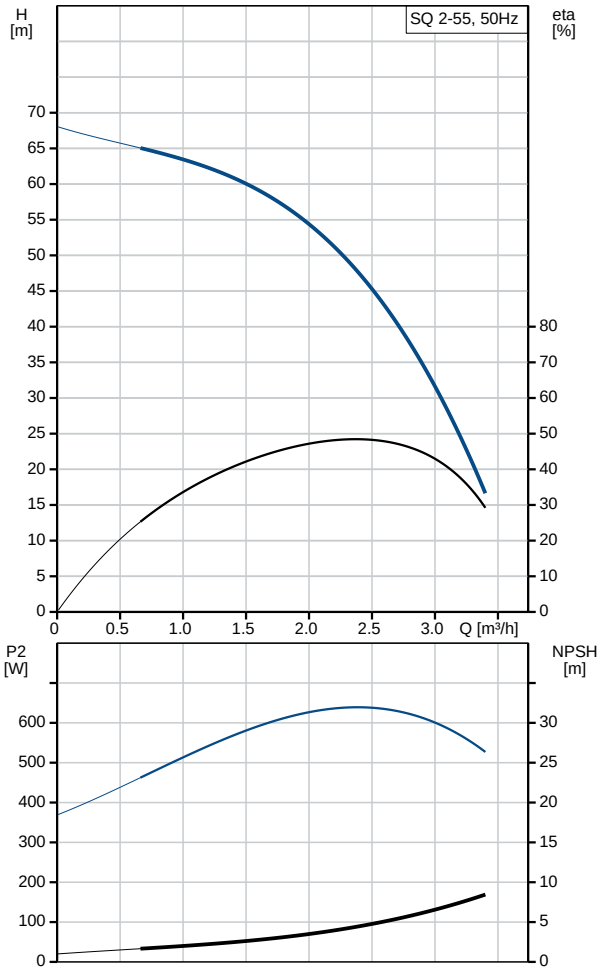

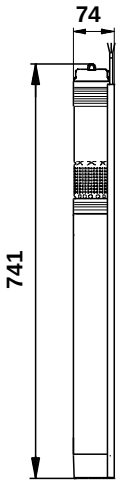

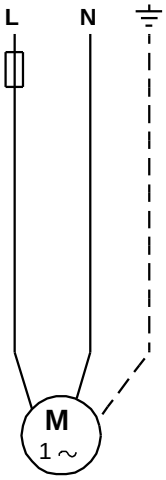

On request SQ 2-55 50 Hz

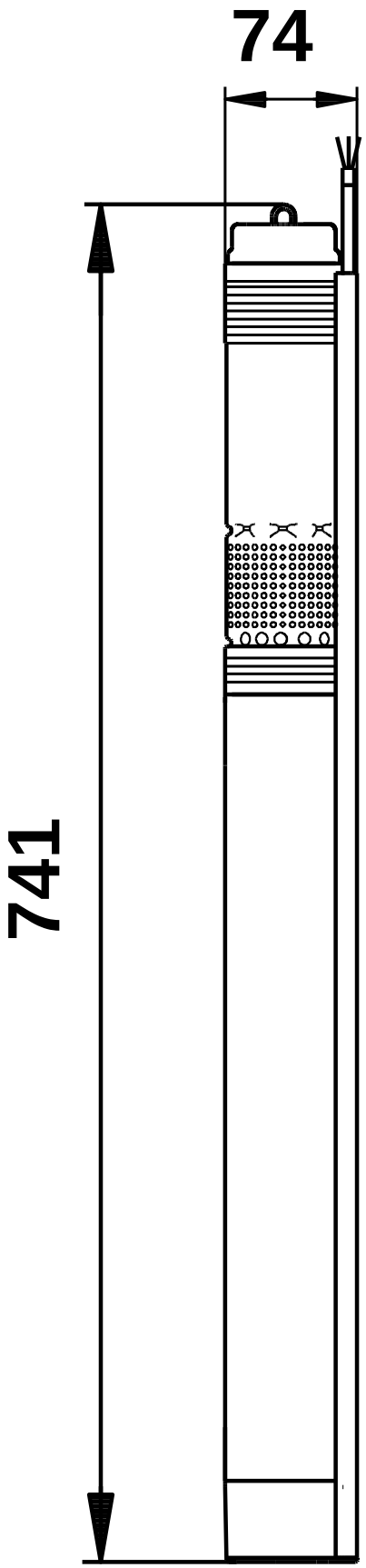

Note! All units are in [mm] unless others are stated.
Disclaimer: This simplified dimensional drawing does not show all details.

Exploded view

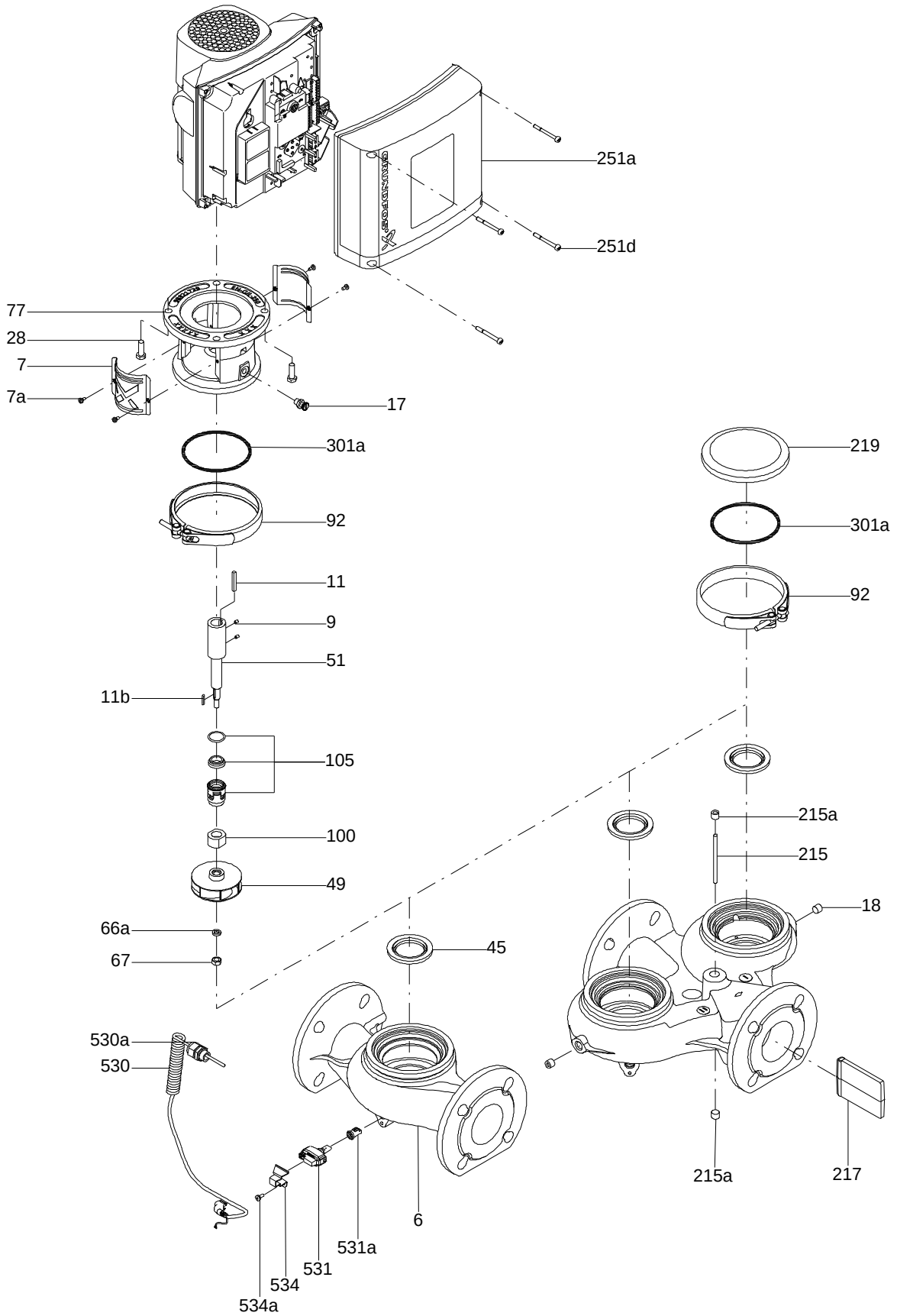

Sectional drawing (TM058200 for TPE2,TPE3)

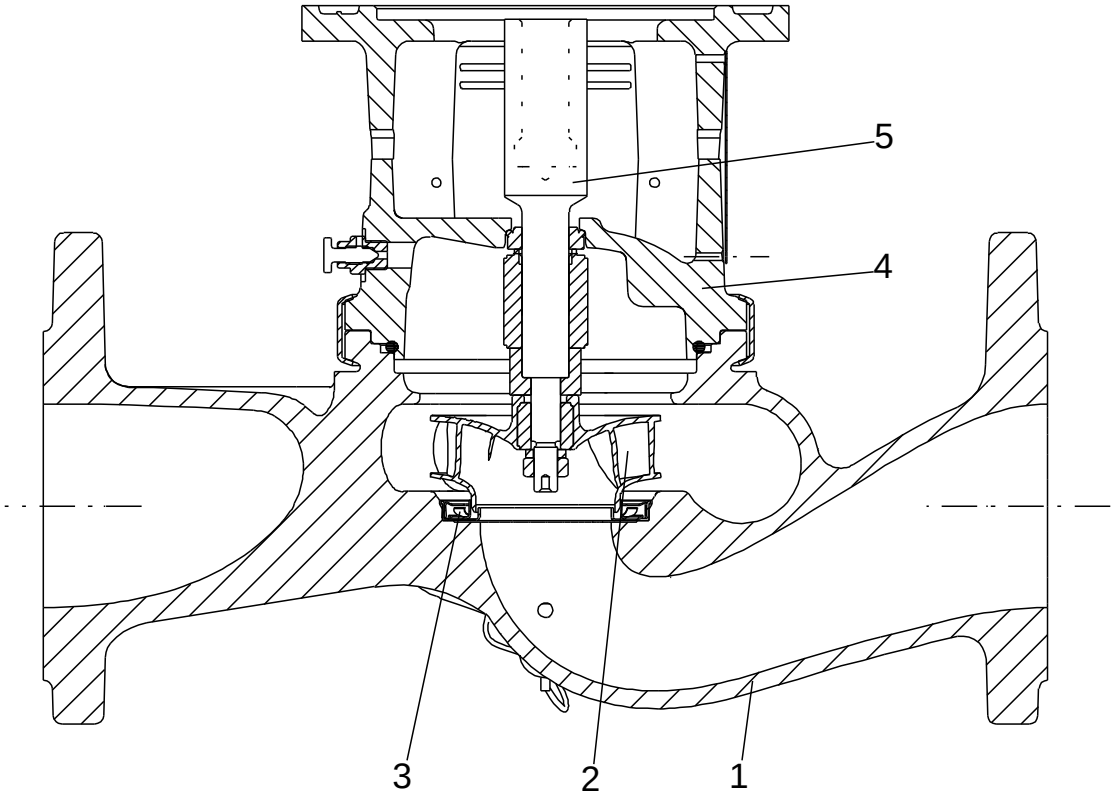

TM058200

Exploded view (TM057026 for MGE model H/I)

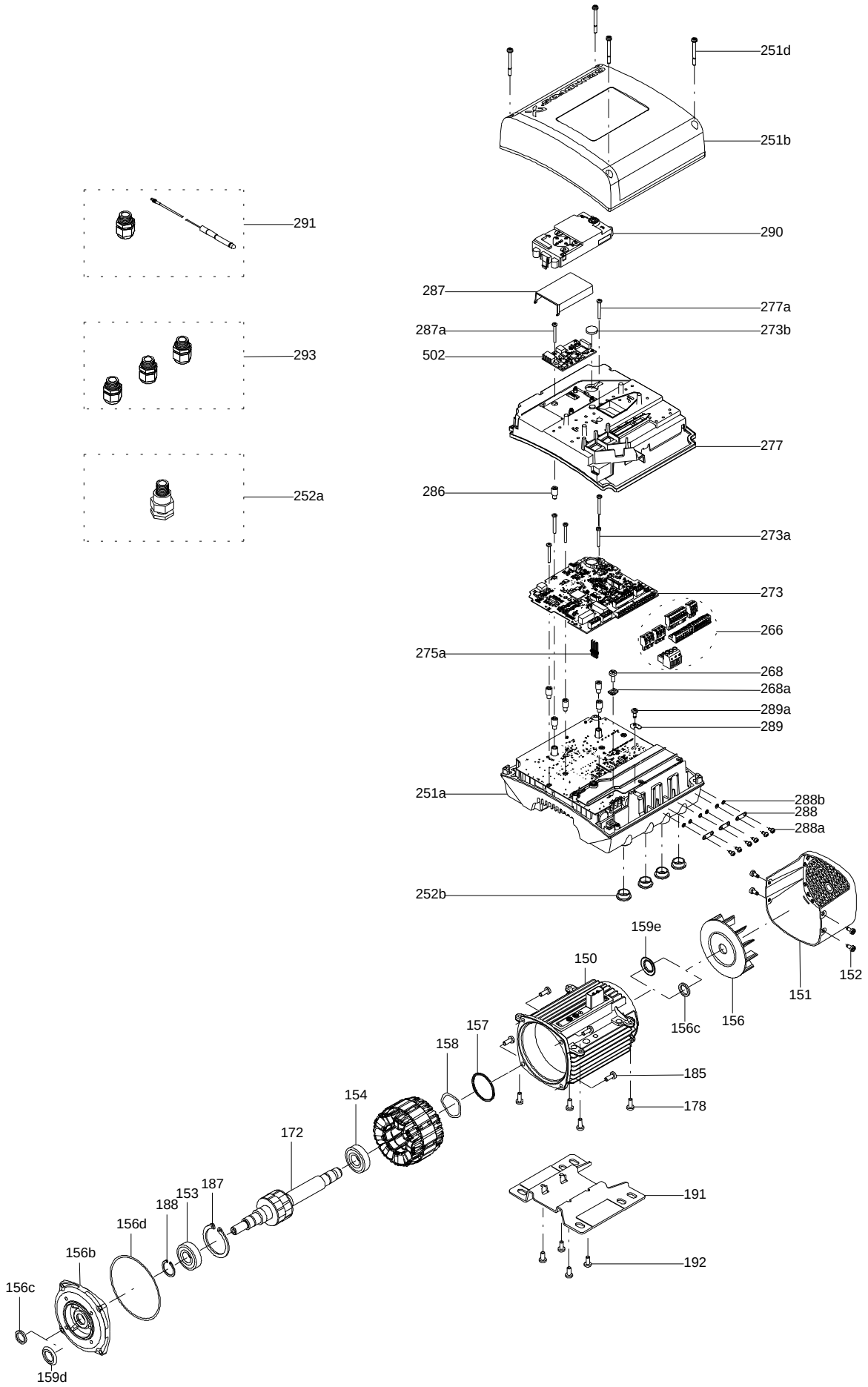

Parts list SQ 2-55, Product No. On request
Valid from 3.12.2012 (1249)

	Pos	Description	Annotation	Données de classification	Référence	Quantité	Unité
-		Pump w/o motor				1	pcs
	1a	Discharge chamber		Thread: RP 1 1/4"		1	
	16	Shaft cpl.		Length (mm): 124,6		1	
	55	Pump sleeve				1	
-		Motor				1	pcs
		Motor liquid				0	
	220	Power cable				1	
-	250	Screw				4	
	18a	Pan head tapping screw				2	
	250	Pan head screw				4	
-	250	Screw				1	
	18a	Pan head tapping screw				2	
	250	Pan head screw				4	
	18	Cable guard				1	pcs
	18a	Pan head tapping screw				2	pcs
	220	Cable				1	pcs

Disclaimer: The information about the Grundfos pump in this document may be outdated.
Data may be subject to alterations without further notice.
Please contact us to verify the data above is still accurate/up-to-date.

All information is copyright Grundfos.

info@lenntech.com
https://www.lenntech.com
tel. +31 152 610 900
fax. +31 152 616 289