GRUNDFOS **DATA BOOKLET**

# SQ 1-110 1.15kW 200-240V 50/60Hz

**Grundfos pump 96510193**

Thank you for your interest in our products. Please contact us for more information, or visit our website

https://www.lenntech.com/grundfos/SQC01/96510193/SQ-1-110.html

info@lenntech.com
tel. +31 152 610 900
fax. +31 152 616 289

| Position | Qty. | Description |
|---|---|---|
| | 1 | **SQ 1-110** |

**Note! Product picture may differ from actual product**

Product No.: On request

3" multi-stage, submersible pump designed for domestic water supply, liquid transfer in tanks, irrigation and environmental applications. The pump has "floating" impellers, each with its own tungsten carbide/ceramic bearing.

The pump features soft starting and protection against dry-running, upthrust, overvoltage, undervoltage, overload and overtemperature.

The motor is a single-phase motor of the permanent magnet rotor type ensuring optimum efficiency within a wide load range.

The motor is fitted with a replaceable end cover with socket.

**Liquid:**

| | |
|---|---|
| Pumped liquid: | Water |
| Maximum liquid temperature: | 35 °C |
| Max liquid t at 0.15 m/sec: | 35 °C |
| Liquid temperature during operation: | 20 °C |
| Density: | 998.2 kg/m³ |

**Technical:**

| | |
|---|---|
| Rated flow: | 1 m³/h |
| Rated head: | 127 m |
| Approvals on motor nameplate: | CE,UL,CUL |
| Curve tolerance: | ISO9906:2012 3B |

**Materials:**

| | |
|---|---|
| Pump: | Polyamide / Stainless steel<br>DIN W.-Nr. 1.4301<br>AISI 304 |
| Impeller: | Polyamide |
| Motor: | Stainless steel<br>DIN W.-Nr. 1.4301<br>AISI 304 |

**Installation:**

| | |
|---|---|
| Pump outlet: | Rp 1 1/4 |
| Minimum borehole diameter: | 76 mm |

**Electrical data:**

| | |
|---|---|
| Motor type: | MS3 |
| Power input - P1: | 1.65 kW |
| Rated power - P2: | 1.15 kW |
| Mains frequency: | 50 Hz |
| Rated voltage: | 1 x 200-240 V |
| Rated current: | 8.4 A |
| Power factor: | 1.00 |
| Rated speed: | 10700 rpm |
| Start. method: | direct-on-line |

| Position | Qty. | Description |
|---|---|---|
| | | Enclosure class (IEC 34-5): IP68<br>Insulation class (IEC 85): F<br>Length of cable: 1.5 m<br><br>**Others:**<br>Net weight: 5.7 kg<br>Gross weight: 6 kg<br>Shipping volume: 0.01 m³<br>Danish VVS No.: 388431510<br>Norwegian NRF no.: 9041306 |

# On request SQ 1-110 50 Hz

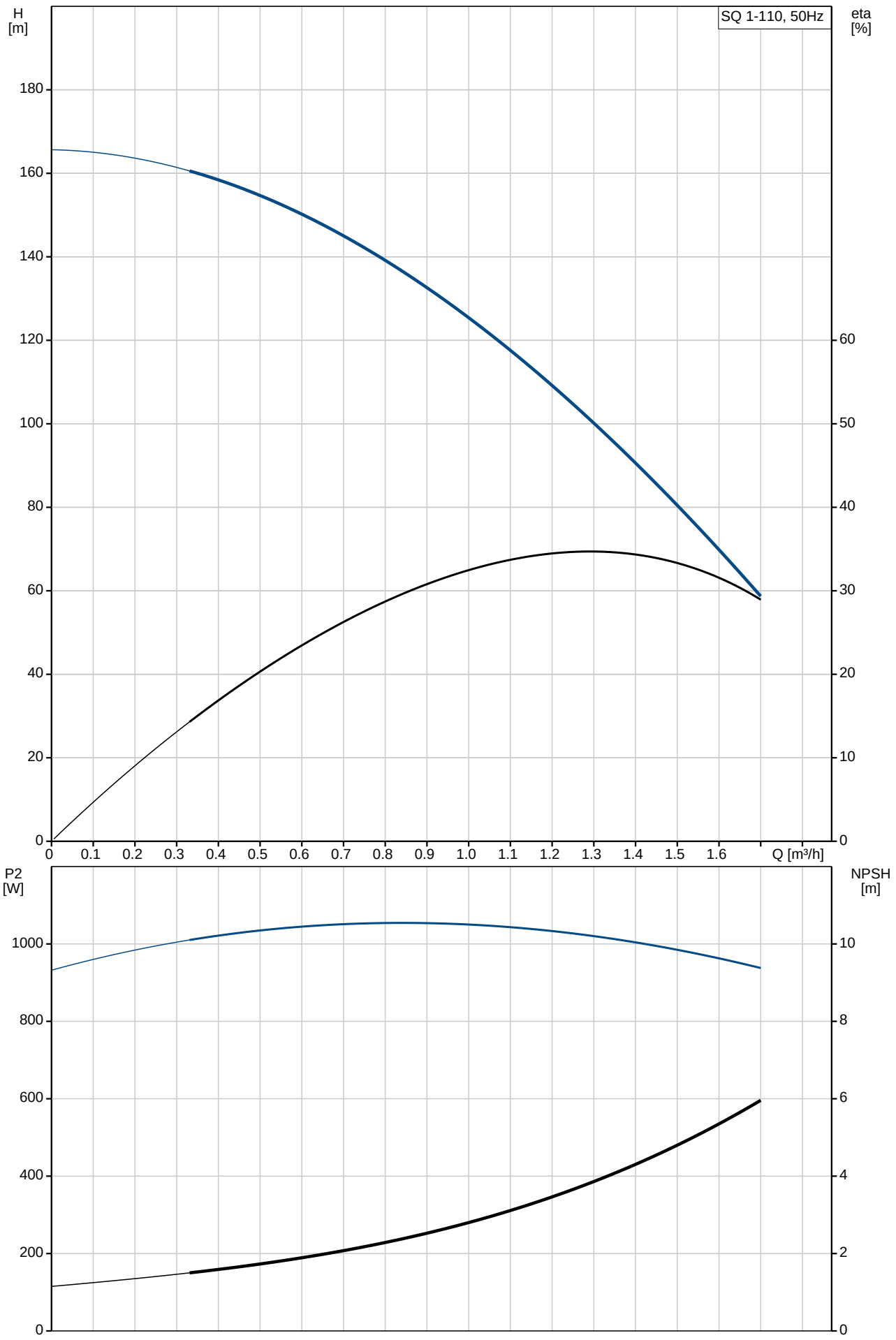

| Description | Value |
|---|---|
| **General information:** | |
| Product name: | SQ 1-110 |
| Product No: | On request |
| EAN number: | On request |
| **Technical:** | |
| Rated flow: | 1 m³/h |
| Rated head: | 127 m |
| Stages: | 7 |
| Approvals on motor nameplate: | CE,UL,CUL |
| Curve tolerance: | ISO9906:2012 3B |
| Pump No: | 96080393 |
| Model: | B |
| Valve: | pump with built-in non-return valve |
| **Materials:** | |
| Pump: | Polyamide / Stainless steel |
| | DIN W.-Nr. 1.4301 |
| | AISI 304 |
| Impeller: | Polyamide |
| Motor: | Stainless steel |
| | DIN W.-Nr. 1.4301 |
| | AISI 304 |
| **Installation:** | |
| Pump outlet: | Rp 1 1/4 |
| Minimum borehole diameter: | 76 mm |
| **Liquid:** | |
| Pumped liquid: | Water |
| Maximum liquid temperature: | 35 °C |
| Max liquid t at 0.15 m/sec: | 35 °C |
| Liquid temperature during operation: | 20 °C |
| Density: | 998.2 kg/m³ |
| **Electrical data:** | |
| Motor type: | MS3 |
| Power input - P1: | 1.65 kW |
| Rated power - P2: | 1.15 kW |
| Mains frequency: | 50 Hz |
| Rated voltage: | 1 x 200-240 V |
| Rated current: | 8.4 A |
| Power factor: | 1.00 |
| Rated speed: | 10700 rpm |
| Start. method: | direct-on-line |
| Enclosure class (IEC 34-5): | IP68 |
| Insulation class (IEC 85): | F |
| Motor protec: | Y |
| Thermal protec: | internal |
| Length of cable: | 1.5 m |
| Motor No: | 96160851 |
| **Controls:** | |
| CU 300/CU 301: | no communication possible |
| **Others:** | |
| Net weight: | 5.7 kg |
| Gross weight: | 6 kg |
| Shipping volume: | 0.01 m³ |
| Sales region: | EU/S-AMREG/APREG |
| Danish VVS No.: | 388431510 |
| Norwegian NRF no.: | 9041306 |

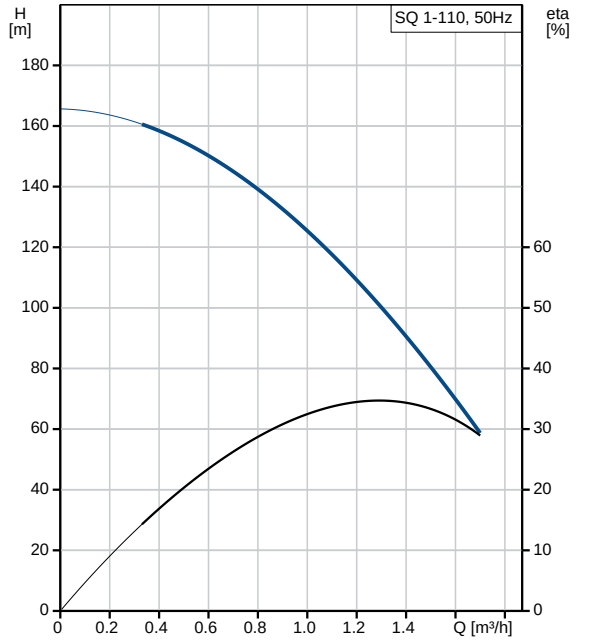


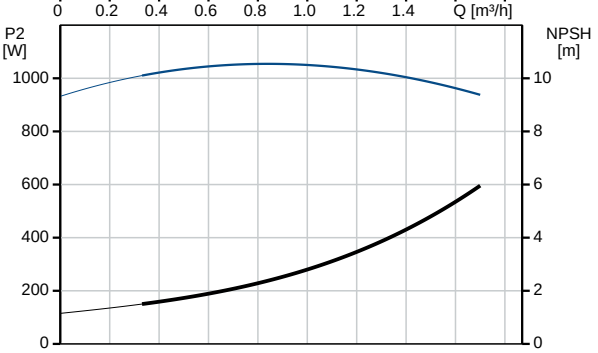


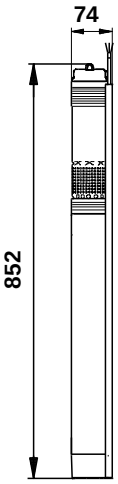


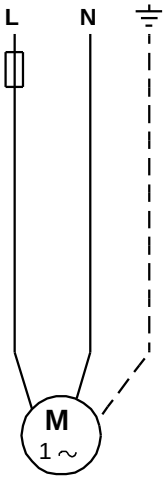

# On request SQ 1-110 50 Hz

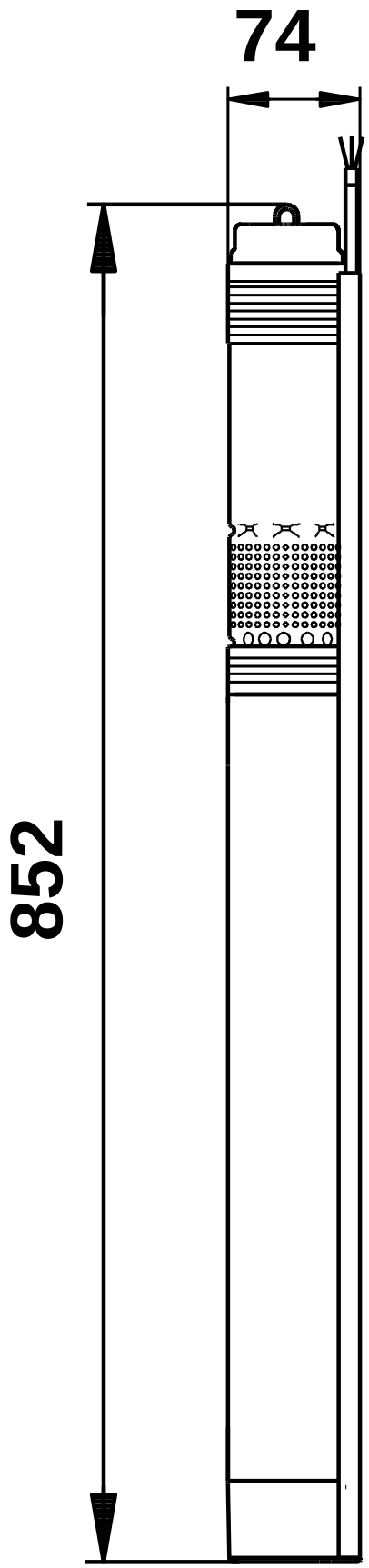


Note! All units are in [mm] unless others are stated.
Disclaimer: This simplified dimensional drawing does not show all details.

## Exploded view

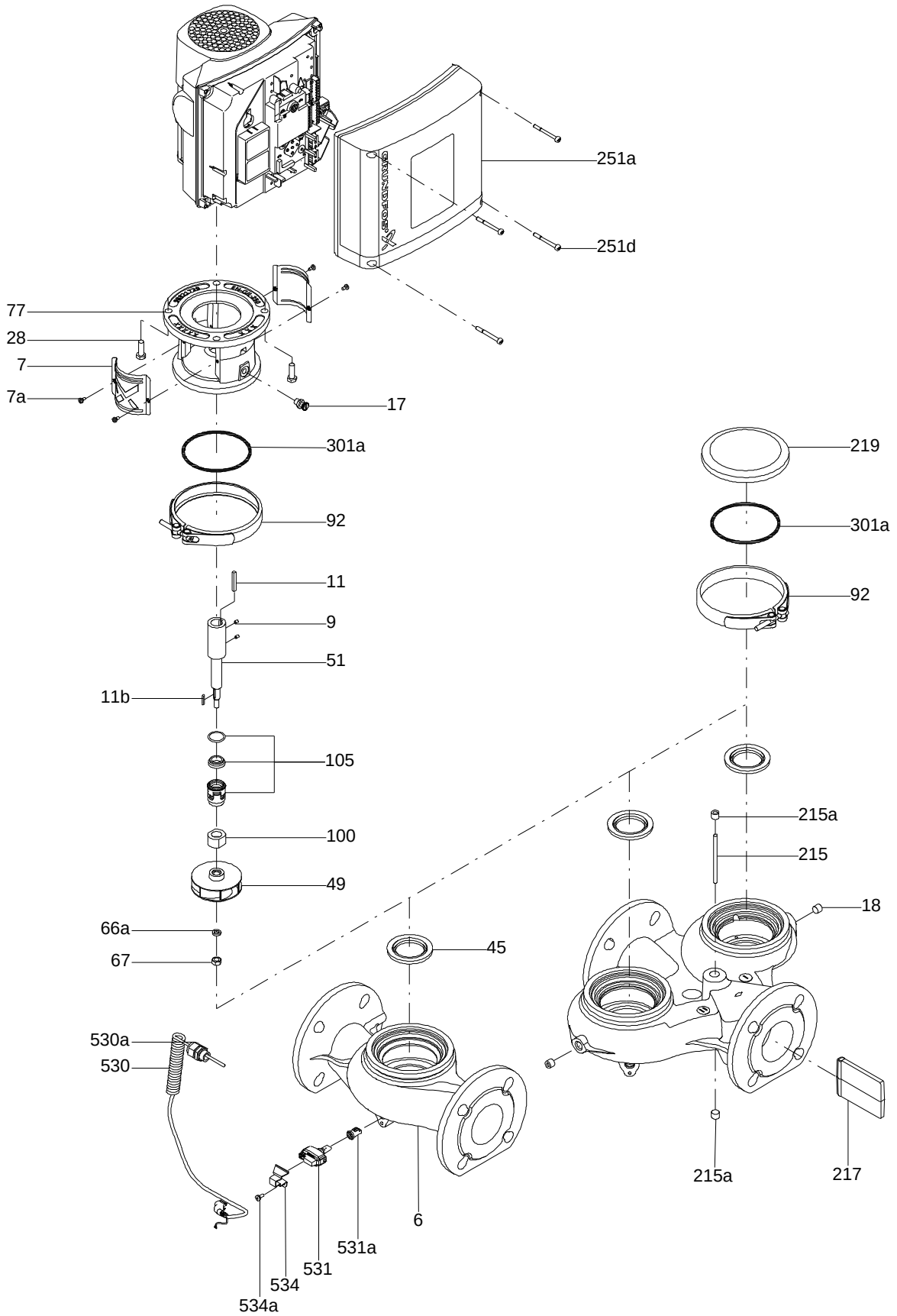

**Sectional drawing (TM058200 for TPE2,TPE3)**

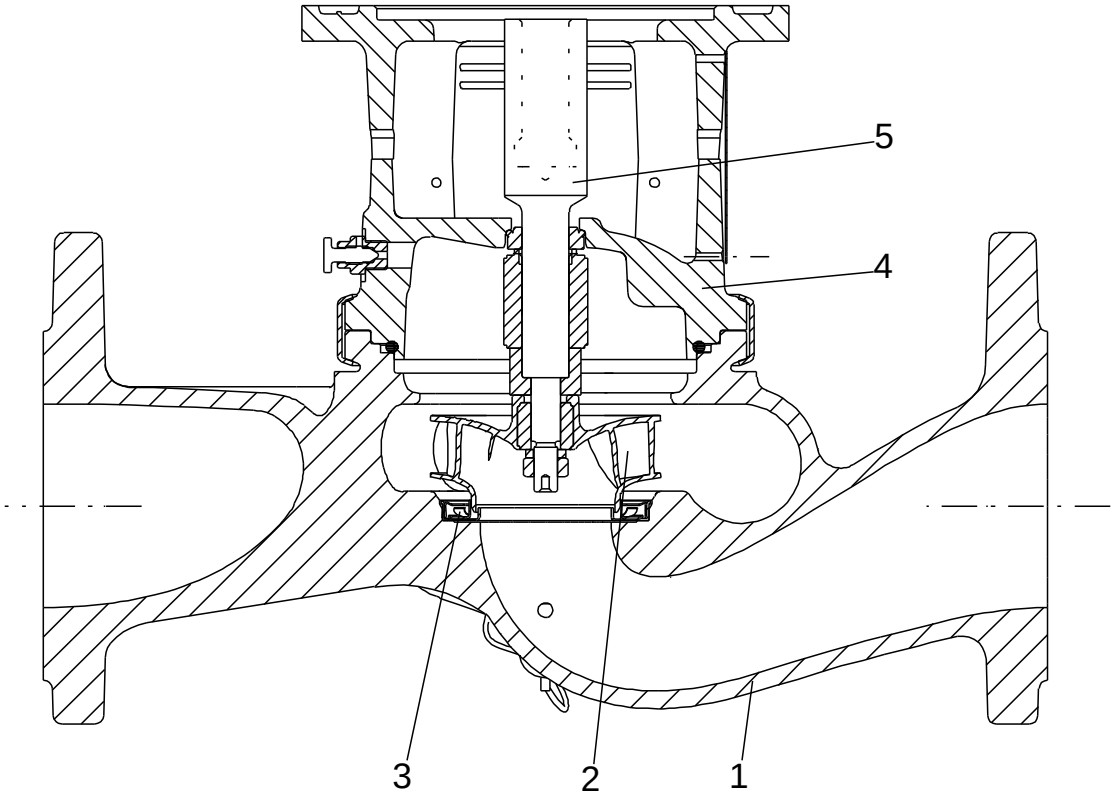


TM058200

## Exploded view ( TM057026 for MGE model H/I )

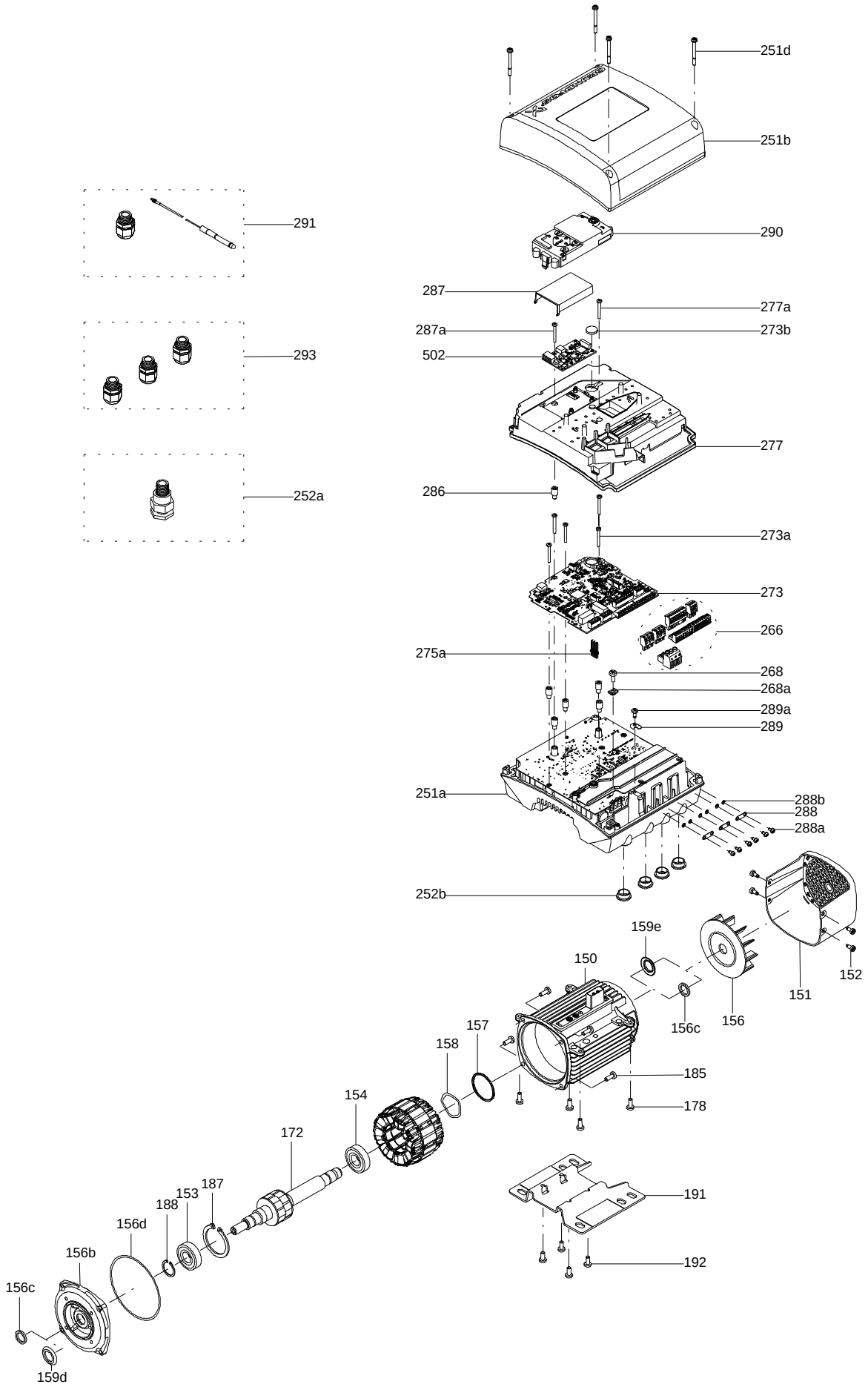

# Parts list SQ 1-110, Product No. On request
# Valid from 3.12.2012 (1249)

| | Pos | Description | Annotation | Données de classification | Référence | Quantité | Unité |
|---|---|---|---|---|---|---|---|
| - | | Pump w/o motor | | | | 1 | pcs |
| | 1a | Discharge chamber | | Thread: RP 1 1/4" | | 1 | |
| | 16 | Shaft cpl. | | Length (mm): 232,6 | | 1 | |
| | 55 | Pump sleeve | | | | 1 | |
| - | | Motor | | | | 1 | pcs |
| | | Motor liquid | | | | 0 | |
| | 220 | Power cable | | | | 1 | |
| - | 250 | Screw | | | | 4 | |
| | 18a | Pan head tapping screw | | | | 2 | |
| | 250 | Pan head screw | | | | 4 | |
| - | 250 | Screw | | | | 1 | |
| | 18a | Pan head tapping screw | | | | 2 | |
| | 250 | Pan head screw | | | | 4 | |
| | 18 | Cable guard | | | | 1 | pcs |
| | 18a | Pan head tapping screw | | | | 2 | pcs |

*Disclaimer: The information about the Grundfos pump in this document may be outdated.*
*Data may be subject to alterations without further notice.*
*Please contact us to verify the data above is still accurate/up-to-date.*

*All information is copyright Grundfos.*

info@lenntech.com
https://www.lenntech.com
tel. +31 152 610 900
fax. +31 152 616 289