GRUNDFOS **DATA BOOKLET**

TP 32-60/2-A-F-Z-BUBE 1X230 50HZ

Grundfos Pump 96401831

Thank you for your interest in our products
Please contact us for more information, or visit our website
https://www.lenntech.com/grundfos/TPB00/96401831/TP-32-60-2-B-A-F-Z-BUBE.html

info@lenntech.com
tel. +31-15-261.09.00
fax. +31-15-261.62.89

Position	Qty.	Description
	1	**TP 32-60/2 B A-F-Z-BUBE**

Note! Product picture may differ from actual product

Product No.: 96401831

The pump is of the top-pull-out design, i.e. the power head (motor, pump head and impeller) can be removed for maintenance or service while the pump housing remains in the pipework.

The pump is fitted with an unbalanced rubber bellows seal. The shaft seal is according to EN 12756. Pipework connection is via PN 6/10 DIN flanges (EN 1092-2 and ISO 7005-2).

The pump is fitted with a fan-cooled asynchronous motor.

Further product details

Pump

Pump housing and pump head are electrocoated to improve the corrosion resistance.

Electrocoating includes:

1) Alkaline-based cleaning.
2) Pretreatment with zinc phosphate coating.
3) Cathodic electrocoating (epoxy).
4) Curing of paint film at 200-250 °C.

The pump is fitted with an unbalanced rubber bellows seal with torque transmission across the spring and around the bellows. Due to the bellows, the seal does not wear the shaft, and the axial movement is not prevented by deposits on the shaft.

Primary seal:

- Rotating seal ring material: Tungsten carbide (WC)
- Stationary seat material: Carbon graphite, resin-impregnated

This is a widely used material pairing. If the pumped liquid contains particles, wear on the seal faces must be expected. Due to the favourable lubricating properties of carbon graphite, the seal is suitable for use even under poor lubricating conditions, such as hot water. However, under such conditions, wear on the carbon graphite face reduces seal life.

Secondary seal material: EPDM (ethylene-propylene rubber)

EPDM has excellent resistance to hot water. EPDM is not suitable for mineral oils.

A circulation of liquid through the duct of the air vent screw ensures lubrication and cooling of the shaft seal.

Motor

The motor is a totally enclosed, fan-cooled motor with principal dimensions to IEC and DIN standards. Electrical tolerances comply with IEC 60034.

The motor has built-in thermal protection (PTO current and temperature sensors) in accordance with IEC 60034-11 and requires no further motor protection. The protection reacts to both slow- and quick-rising temperatures, e.g. constant overload and stalled conditions.

As the thermal protection incorporates automatic reset, the motor must be connected in a way which ensures that the automatic reset cannot cause accidents.

Technical data

Liquid:

Pumped liquid:	Water
Liquid temperature range:	0 .. 140 °C
Liquid temperature during operation:	20 °C
Density:	998.2 kg/m³

Technical:

Position	Qty.	Description
		Speed for pump data: 2890 rpm Rated flow: 7.5 m³/h Rated head: 3.6 m Primary shaft seal: BUBE Curve tolerance: ISO9906:2012 3B **Materials:** Impeller: AISI 304 **Installation:** Range of ambient temperature: -30 .. 40 °C Maximum operating pressure: 10 bar Flange standard: DIN Pipe connection: DN 32 Pressure rating: PN 6/10 Port-to-port length: 220 mm Flange size for motor: FT75 **Electrical data:** Motor type: 71A Rated power - P2: 0.25 kW Power (P2) required by pump: 0.25 kW Mains frequency: 50 Hz Rated voltage: 1 x 220-240 V Rated current: 1,75-2,04 A Starting current: 540-520 % Cos phi - power factor: 0,94 Rated speed: 2870-2880 rpm Motor efficiency at full load: 68.8-61.8 % Number of poles: 2 Enclosure class (IEC 34-5): 55 Dust/Jetting Insulation class (IEC 85): F **Others:** Minimum efficiency index, MEI ≥: 0.56 Net weight: 18.8 kg Gross weight: 21.3 kg Shipping volume: 0.06 m³

96401831 TP 32-60/2 B 50 Hz

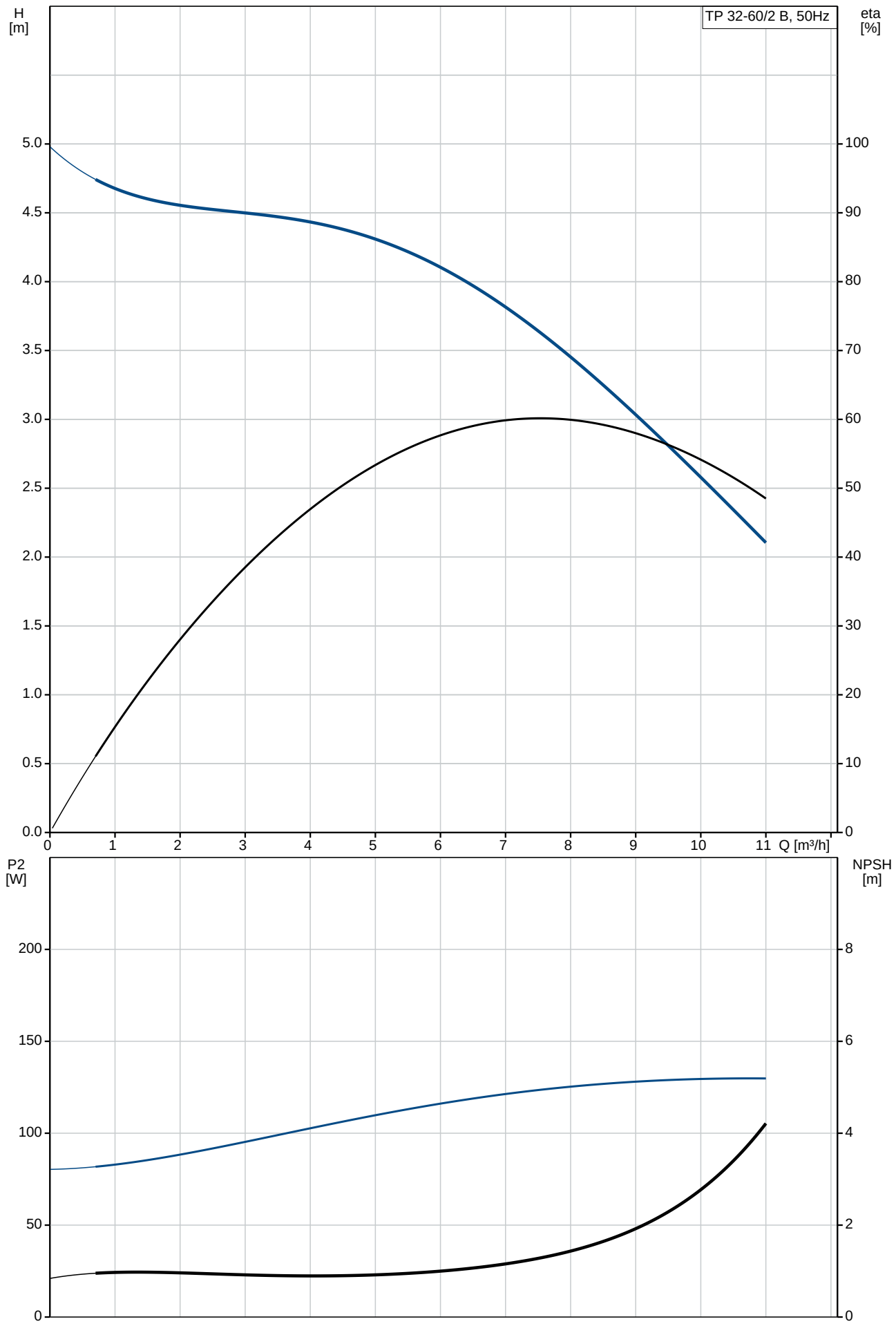

Printed from Grundfos Product Centre [2018.02.043]

Description	Value
General information:	
Product name:	TP 32-60/2 B A-F-Z-BUBE
Product No:	96401831
EAN number:	5700390652524
Technical:	
Speed for pump data:	2890 rpm
Rated flow:	7.5 m³/h
Rated head:	3.6 m
Head max:	60 dm
Primary shaft seal:	BUBE
Curve tolerance:	ISO9906:2012 3B
Pump version:	A
Model:	A
Materials:	
Impeller:	AISI 304
Material code:	Z
Installation:	
Range of ambient temperature:	-30 .. 40 °C
Maximum operating pressure:	10 bar
Flange standard:	DIN
Connect code:	F
Pipe connection:	DN 32
Pressure rating:	PN 6/10
Port-to-port length:	220 mm
Flange size for motor:	FT75
Liquid:	
Pumped liquid:	Water
Liquid temperature range:	0 .. 140 °C
Liquid temperature during operation:	20 °C
Density:	998.2 kg/m³
Electrical data:	
Motor type:	71A
Rated power - P2:	0.25 kW
Power (P2) required by pump:	0.25 kW
Mains frequency:	50 Hz
Rated voltage:	1 x 220-240 V
Rated current:	1,75-2,04 A
Starting current:	540-520 %
Cos phi - power factor:	0,94
Rated speed:	2870-2880 rpm
Motor efficiency at full load:	68.8-61.8 %
Number of poles:	2
Enclosure class (IEC 34-5):	55 Dust/Jetting
Insulation class (IEC 85):	F
Motor protec:	PTO
Motor No:	98714253
Others:	
Minimum efficiency index, MEI ≥:	0.56
Net weight:	18.8 kg
Gross weight:	21.3 kg
Shipping volume:	0.06 m³

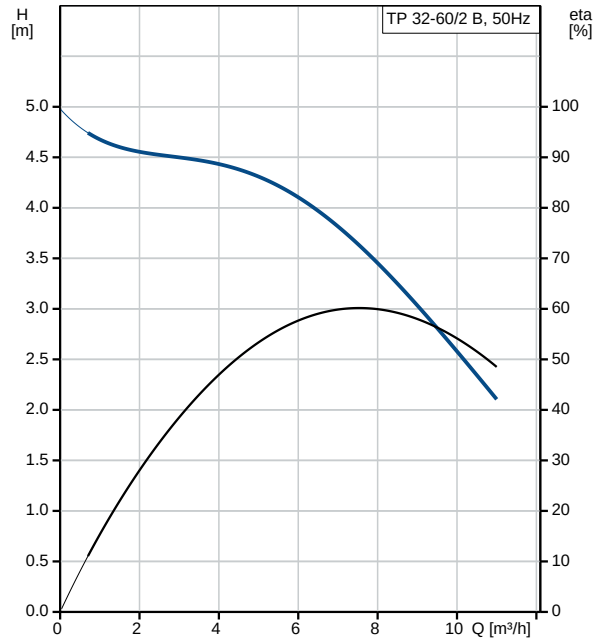

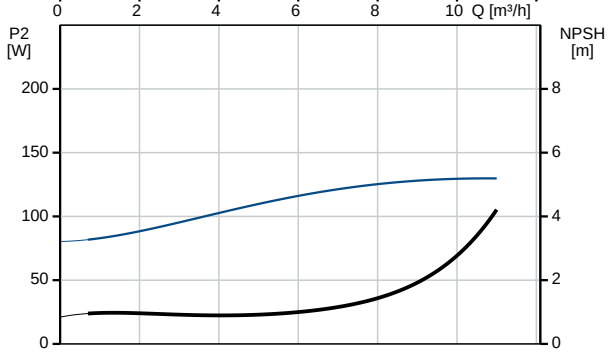

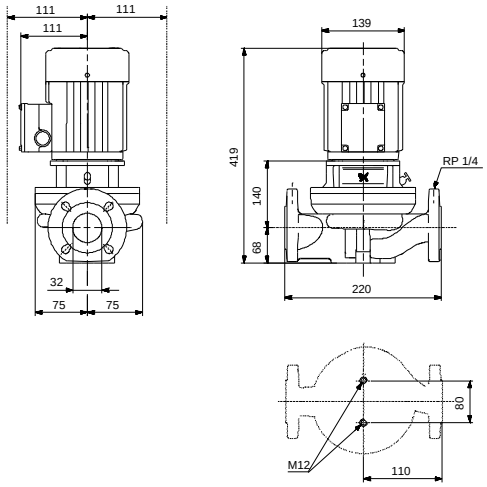

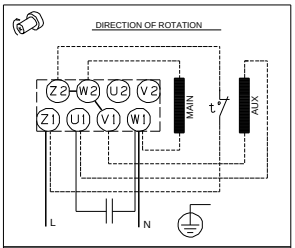

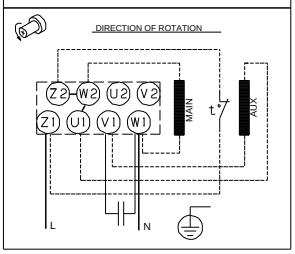

Printed from Grundfos Product Centre [2018.02.043]

96401831 TP 32-60/2 B 50 Hz

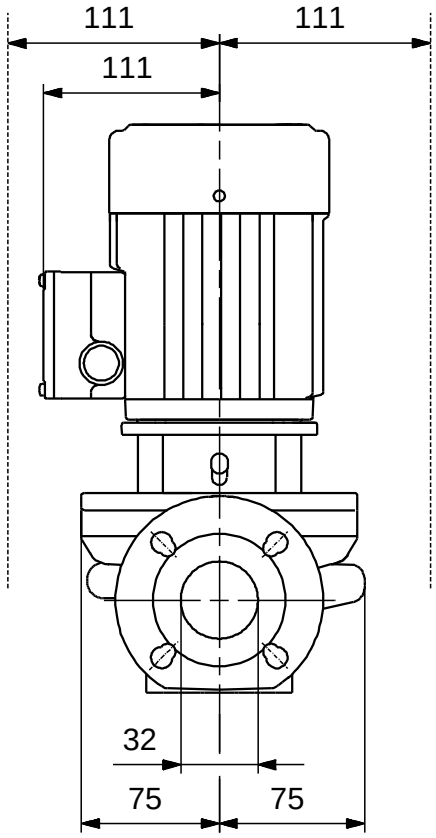

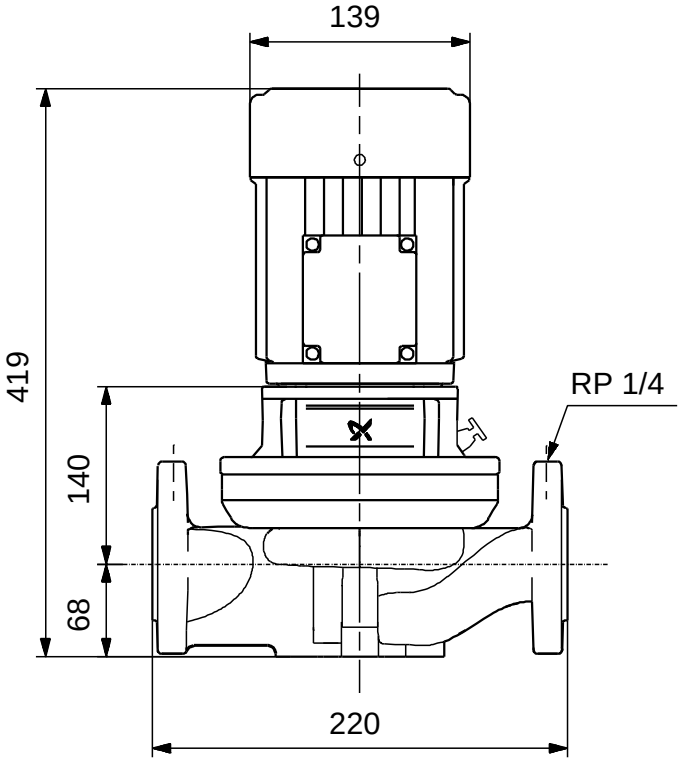

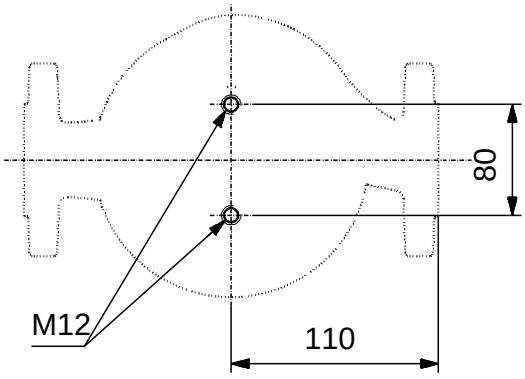

Note! All units are in [mm] unless others are stated.
Disclaimer: This simplified dimensional drawing does not show all details.

96401831 TP 32-60/2 B 50 Hz

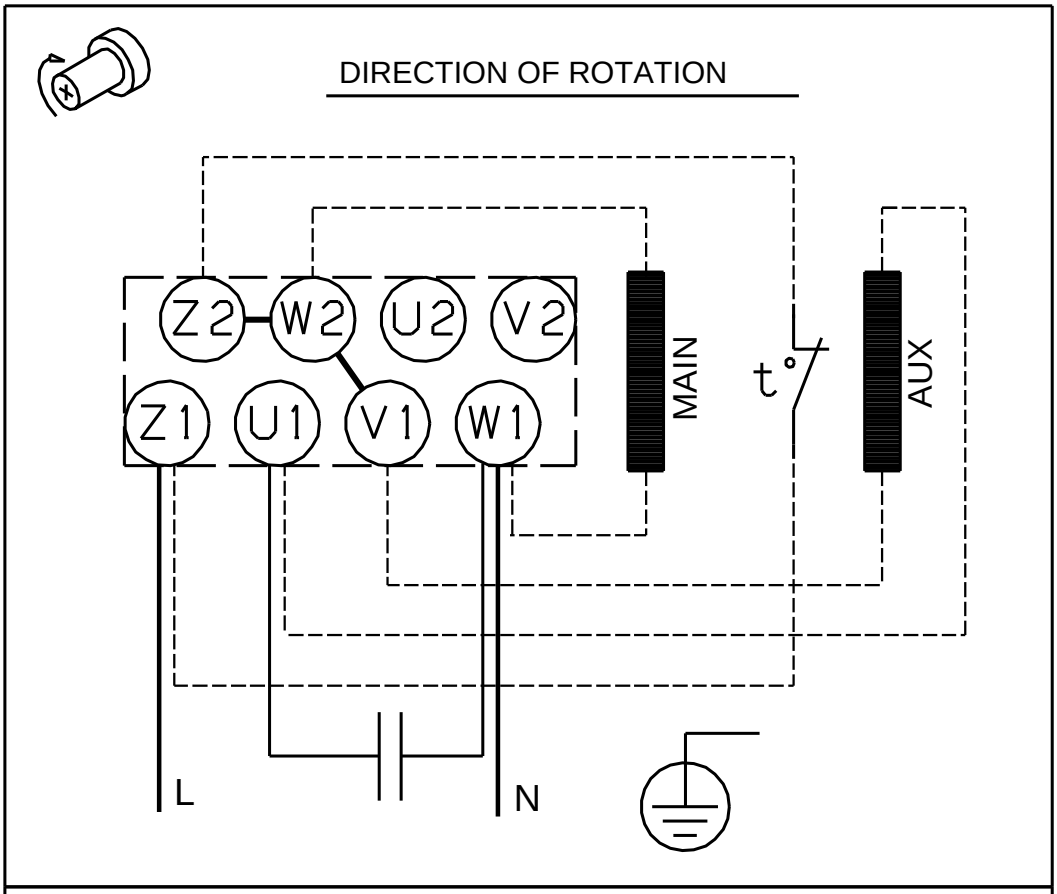

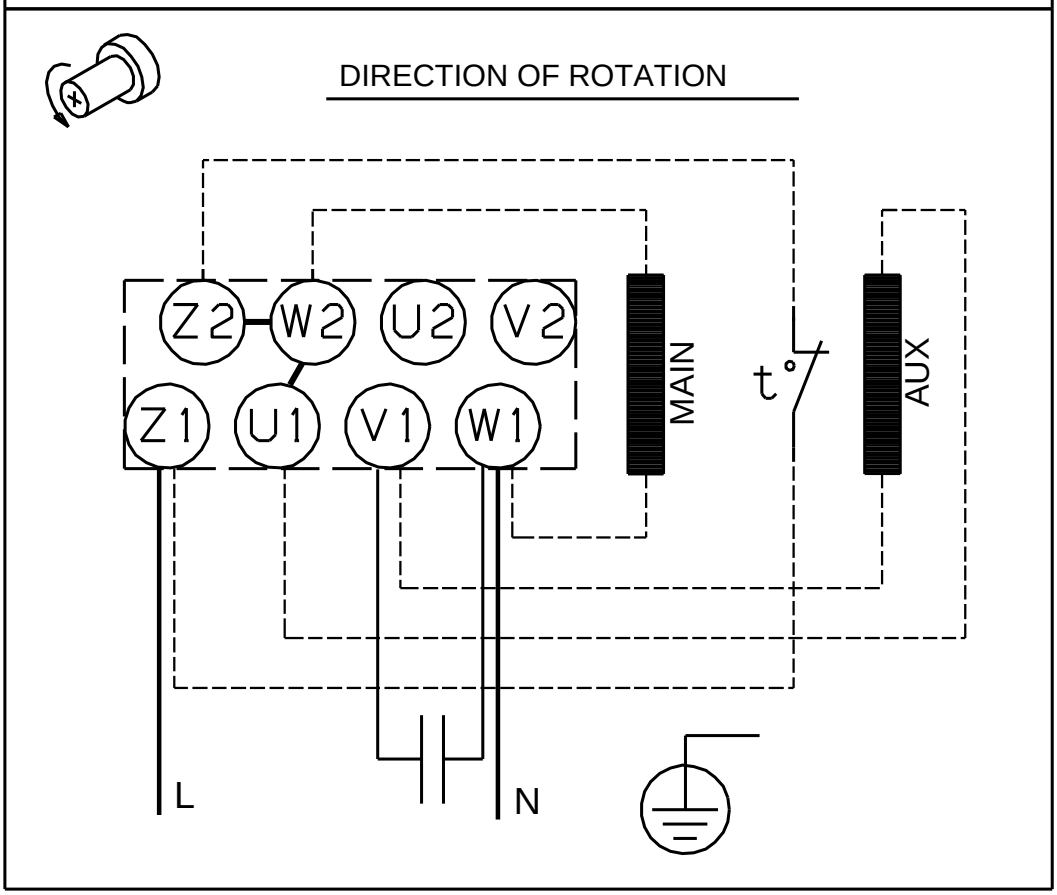

Note! All units are in [mm] unless others are stated.

Disclaimer: The information about the Grundfos pump in this document may be outdated.
Data may be subject to alterations without further notice.
Please contact us to verify the data above is still accurate/up-to-date.

All information is copyright Grundfos.

info@lenntech.com
www.lenntech.com
tel. +31-15-261.09.00
fax. +31-15-261.62.89