13428-00

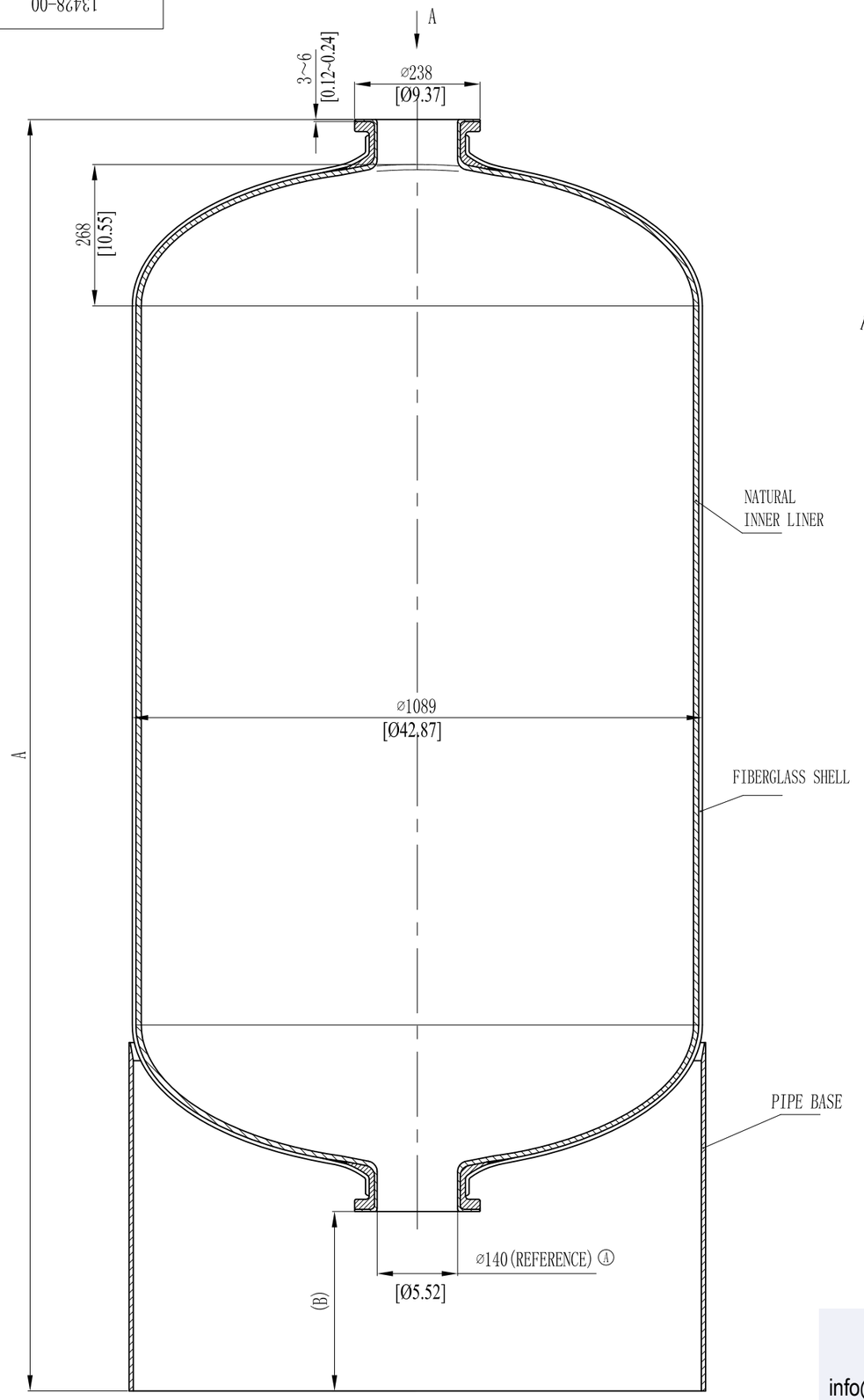

MODEL	A				B		TOTAL VOLUME			DOME VOLUME			WEIGHT	
	mm	inch	+/- mm	+/- inch	mm	inch	liters	U.S.gal	cubic FT	liters	U.S.gal	cubic FT	Kg	LBS
42x72	2396	94.33	15	0.59	305	12.01	1494L	394.7	52.8	150.6	39.79	5.32	200	440
42x63	2108	82.99	15	0.59	254	10.00	1274L	336.6	45.0	150.6	39.79	5.32	181	398
42x63	2134	84.01	15	0.59	280	11.02	1274L	336.6	45.0	150.6	39.79	5.32	181	398
42x51	1767	69.57	15	0.59	254	10.00	995L	262.8	35.1	150.6	39.79	5.32	147	323

Direction A
1:5

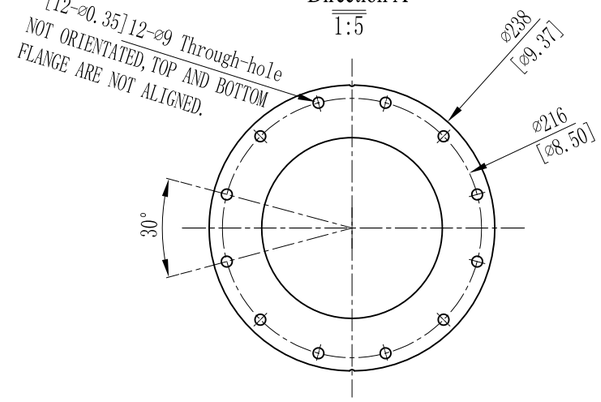

NOTES:

1. TANK MUST MEET ALL APPLICABLE SPECIFICATIONS OF NSF/ANSI 044 STANDARD, LATEST REVISION.
2. OPERATING SPECIFICATIONS:
   - A. MAXIMUM WORKING PRESSURE - 150 PSI (10.5BAR)
   - B. TEMPERATURE RANGE - 34-150° F (1-65℃)
   - C. MAXIMUM VACUUM - 5″Hg (127mm Hg)
3. VISUAL LINER INSPECTION
   - A. NO MORE THAN 20 INTERNAL OR EXTERNAL BLEMISHES OR BURNT DEBRIS.
   - B. NO INTERNAL OR EXTERNAL BLEMISHES OR BURNT DEBRIS LARGER THAN 5×5mm.
   - C. NO INTERNAL BLEMISHES OR BURNT DEBRIS ALLOWED.
4. ALL GLASS STRANDS FROM FIBERGLASS LINER TO BE BONDED AND COVERED.
5. SURFACE TO BE FREE OF NICKS, SCRATCHES, RESIN AND GLASS.
6. SURFACE FINISH.
7. DIMENSIONS IN PARENTHESIS ARE REFERENCE ONLY.
8. DIMENSIONS IN SQUARE PARENTHESIS ARE INCH UNTI.
9. TANK TO BE BONDED TO BASE.
10. USING A STANDARD LEVEL WITH TANK POSITIONED ON A LEVEL SURFACE, DATUM B TO BE PARALLEL WITH DATUM A. BUBBLE OF LEVEL MUST FALL COMPLETELY WITHIN LINES WHEN MEASURED AT 90° INTERVALS WHEN PLACED ON THE TOP OF THE FLANGE.
11. AFTER THE TANK IS LEVELED, IT IS RECOMMENDED THAT THE TANK BE BOLTED TO THE FLOOR IN SIX POSITIONS PER THE TRIPOD BASE BOLT HOLE PATTERN WITH 3/8″ ANCHORS.

LENNTECH
info@lenntech.com Tel. +31-152-610-900
www.lenntech.com Fax. +31-152-616-289

VERSION NO.	DESCRIPTION OF CHANGES:	SIGNATURE	DATE
5	ADD the model of 42×51		2012/03/16
4	DIMENSION A CHANGED		2011/08/29

REFERENTIAL PLASTIC SHRINKAGE (IF NECESSARY):

SIGNATURE	NAME	DATE
DESIGN		
INSPECTION		
APPROVAL		

THIS PRODUCT DRAWING CAN NOT BE COPIED AND/OR USED WITHOUT PRIOR WRITTEN APPROVAL OF WAVE CYBER.

WAVE CYBER (SHANGHAI) CO., LTD.

SCALE	MATERIAL	MODEL
1 : 10		DESCRIPTION
QUANTITY	SMOOTHNESS	42"FRP PRESSURE VESSEL (DOUBLE FLANGE OPENING)(PIPE BASE)
PROJECTION	COMPUTER CODE	DRAWING NO. 13428-00 / VERSION NO. 5

DO NOT MEASURE THE DIMENSIONS. | UNIT: MM | TOTAL PAGE: 1