TI01612T/09/EN/04.26-00
71765545
2026-01-16

Technical Information
iTHERM TrustSens TM372

Imperial RTD thermometer with self-calibration technology for hygienic applications

Outstanding sensor technology with self-calibration function
100% Compliance - 0% Effort

Field of application

- Suitable for hygienic and aseptic applications in the food, beverage, and pharmaceutical industries
- 118 °C (244.4 °F) Calibration point for steam-based processes, such as sterilization-in-place (SIP)
- 39 °C (102.2 °F) Calibration point for cleaning-in-place (CIP), pasteurization, distillation
- Hygienic and food compliance: EHEDG, ASME BPE, FDA, 3-A, EC 1935/2004, EC 2023/2006, EU 10/2011
- Device approvals: CE/EAC, CRN, CSA, explosion protection ATEX/IECEx

Advantages

- No system shutdowns and lower costs: Fully automated in situ self-calibration without interrupting the process for recalibration
- Safe audits and reduced risk: Automatically generated, traceable, and auditable calibration certificates
- Increased product quality and process safety: Permanent device monitoring and verification thanks to Heartbeat Technology and automated loop check
- Highest measurement accuracy thanks to individual sensor-transmitter-matching ex works
- Easy to operate: iTHERM TrustSens is preconfigured and enables fast integration; easy to connect and receives measured data immediately. Guided wizards enable intuitive commissioning
- Digital ready for the future: 24/7 access to all calibration data, a cloud-based option via Netilion is also possible

Endress+Hauser
People for Process Automation

Table of contents

About this document 3
Electrical symbols 3
Symbols for certain types of information 3
Symbols in graphics 3

Function and system design 3
Measuring principle 3
Measuring system 4
Equipment architecture 5

Input 5
Measuring range 5

Output 5
Output signal 5
Failure information 5
Load 6
Linearization/transmission behavior 6
Filter 6
Protocol-specific data 6

Wiring 6
Supply voltage 7
Current consumption 7
Electrical connection 7
Device plug connection 7
Overvoltage protection 7

Performance characteristics 8
Reference operating conditions 8
Internal calibration points 8
Measurement uncertainty 8
Long-term drift 8
Ambient temperature effect 9
Influence of supply voltage 9
Response time 9
Calibration 10
Insulation resistance 12

Installation 12
Orientation 12
Installation instructions 12

Environment 15
Ambient temperature range 15
Storage temperature range 15
Climate class 15
Degree of protection 15
Shock and vibration resistance 15
Electromagnetic compatibility (EMC) 15

Process 15
Process temperature range 15
Thermal shock 15
Process pressure range 16
State of aggregation of the medium 16

Mechanical construction 17
Design, dimensions 17
Weight 20
Materials 20
Surface roughness 20
Thermowell 20

Operability 26
Operation concept 26
Local operation 26
Remote operation 26

Certificates and approvals 27
MTBF 27
Hygiene standard 27
Materials in contact with food/product (FCM) 27
CRN approval 27
Surface purity 27
Material resistance 28

Ordering information 28

Application packages 28
Heartbeat Diagnostics 28
Heartbeat Verification 28
Heartbeat Monitoring 28

Accessories 29
Device-specific accessories 29
Service-specific accessories 32
Communication-specific accessories 33
Online tools 33
System components 33

Documentation 34

About this document

Electrical symbols

⎓	Direct current	∼	Alternating current	≂	Direct and alternating current
⏚	Ground connection	⏚	Protective earth (PE)		

Symbols for certain types of information

Symbol	Meaning
✓	**Permitted** Procedures, processes or actions that are permitted.
✓✓	**Preferred** Procedures, processes or actions that are preferred.
✗	**Forbidden** Procedures, processes or actions that are forbidden.
i	**Tip** Indicates additional information.
	Reference to documentation
	Reference to page
	Reference to graphic
	Visual inspection

Symbols in graphics

Symbol	Meaning	Symbol	Meaning
1, 2, 3,...	Item numbers	1., 2., 3....	Series of steps
A, B, C, ...	Views	**A-A, B-B, C-C, ...**	Sections
EX	Hazardous area	~~EX~~	Safe area (non-hazardous area)

Function and system design

The iTHERM TrustSens thermometer incorporates a groundbreaking innovation – its self-calibration functionality. A standard Pt100 sensor element is used in normal operation. The Pt100 measurement is automatically calibrated at a specific process temperature with the help of an integrated, high-precision reference sensor. This eliminates the need to remove the thermometer for calibration purposes.

Measuring principle

Resistance thermometers (RTD)

These resistance thermometers use a Pt100 temperature sensor according to IEC 60751. The temperature sensor is a temperature-sensitive platinum resistor with a resistance of 100 Ω at 0 °C (32 °F) and a temperature coefficient α = 0.003851 $°C^{-1}$.

Thin-film platinum resistance thermometers (TF): A very thin, ultrapure platinum layer, approx. 1 µm thick, is vaporized in a vacuum on a ceramic substrate and then structured photolithographically. The platinum conductor paths formed in this way create the measuring resistance. Additional covering and passivation layers are applied and reliably protect the thin platinum layer from contamination and oxidation, even at high temperatures.

The primary advantages of thin-film temperature sensors are their small sizes and good vibration resistance.

Measuring system

Endress+Hauser offers a complete portfolio of optimized components for the temperature measuring point – everything you need for the seamless integration of the measuring point into the overall facility. These include:
- Power supply unit/barrier
- Display units
- Overvoltage protection

For more information, see the "System Products and Data Managers" brochure (FA00016K).

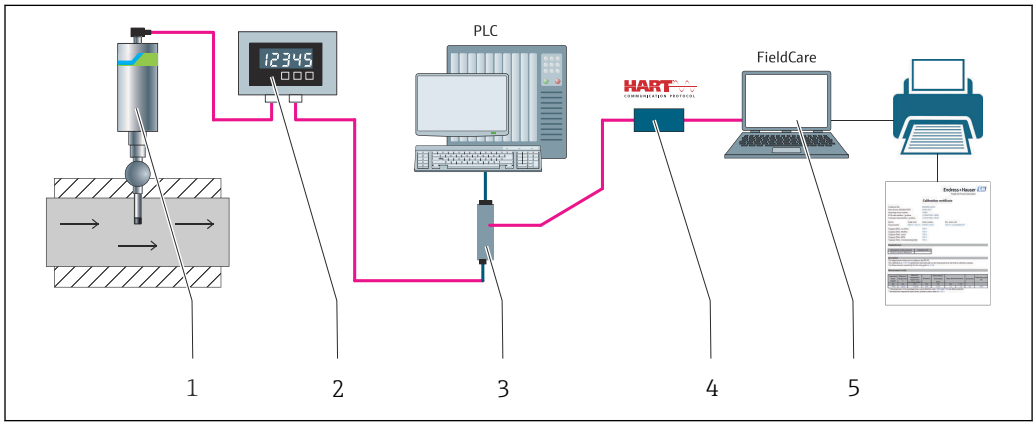

A0031089

1 Example of application, measuring point layout with additional Endress+Hauser components

1 Installed iTHERM compact thermometer with HART communication protocol
2 RIA15 loop-powered process display - It is integrated in the current loop and displays the measuring signal or HART process variables in digital form. The process indicator does not require an external power supply. It is powered directly from the current loop.
3 Active barrier RN42 – The active barrier is used for transmission and galvanic isolation of 4 to 20 mA/HART signals and supplying loop-powered transmitters. The universal power supply works with an input supply voltage of 19.2 to 253 V DC/AC, 50/60 Hz, which means that it can be used in all international power grids.
4 Commubox FXA195 for intrinsically safe HART communication with FieldCare via the USB interface.
5 FieldCare is an FDT-based plant asset management tool from Endress+Hauser; for more details, see 'Accessories' section. The acquired self-calibration data are stored in the device (1) and can be read using FieldCare. This also allows you to create and print an auditable calibration certificate.

Equipment architecture

Structure		Options
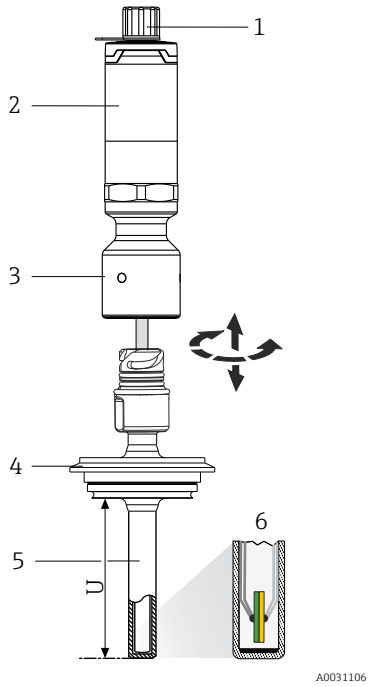	1: Wiring, electrical connection, output signal 2: Transmitter housing	**Your benefits at a glance:** ▪ Optimum protection even with high-pressure cleaning: IP65/67 as standard, optional IP69 protection ▪ M12, 4-pin plug, reduced cost and effort, incorrect wiring is prevented ▪ Compact, built-in transmitter (4 to 20 mA, HART)
	3: Extension neck	▪ Welded in place or removable ▪ Optional with iTHERM QuickNeck bayonet joint **Your benefits at a glance:** ▪ **iTHERM QuickNeck:** tool-free removal of the compact thermometer ▪ IP69 protection: safety under extreme process conditions
	4: Process connection → 📄 20	More than 50 different versions.
	5: Thermowell	▪ Versions with and without thermowell (insert in direct contact with process) ▪ Various diameters ▪ Various tip shapes (straight or reduced)
	6: Insert	Sensor model: thin-film Pt100 sensor (TF) with iTHERM TrustSens technology. **Your benefits at a glance:** ▪ Risk and cost reduction thanks to Heartbeat technology ▪ Fully automated, traceable, in situ self-calibration ▪ Automated documentation, memory for the last 350 calibration points ▪ Printable "audit-proof" calibration certificate ▪ No risk of non-compliance or undetected failures ▪ International certificates and approvals

Input

Measuring range

Pt100 thin-film (TF):
- −40 to +160 °C (−40 to +320 °F)
- Optional −40 to +190 °C (−40 to +374 °F)

Output

Output signal

Analog output	4 to 20 mA
Digital output	HART protocol (revision 7)

Failure information

Failure information as per NAMUR NE43:

Failure information is created if the measuring information is missing or not valid. A complete list of all the errors occurring in the measuring system is created.

Underranging	Linear decrease from 4.0 to 3.8 mA
Overranging	Linear increase from 20.0 to 20.5 mA
Failure, e.g. sensor breakage, sensor short-circuit	≤ 3.6 mA ("low") or ≥ 21.5 mA ("high"), can be selected The "high" alarm setting can be set between 21.5 mA and 23 mA, thus providing the flexibility needed to meet the requirements of various control systems.

Load

Maximum possible HART communication resistance

$R_{b\ max.} = (U_{b\ max.} - 12\ V) / 0.023\ A$ (current output)

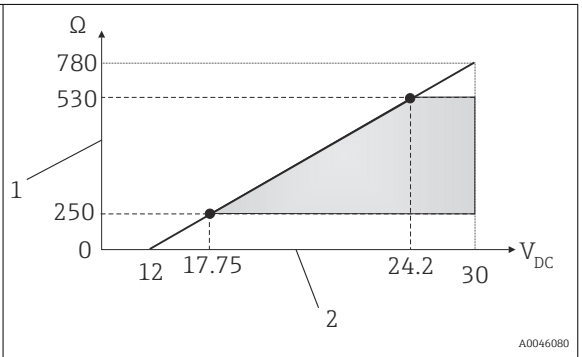

1 Load
2 Supply voltage U_b

Linearization/transmission behavior

Temperature-linear

Filter

1st order digital filter: 0 to 120 s, factory setting: 0 s (PV)

Protocol-specific data

HART

Manufacturer ID	17 (0x11)
Device type ID	0x11CF
HART revision	7
Device description files (DTM, DD)	Information and files at: ▪ www.endress.com/downloads ▪ www.fieldcommgroup.org
HART load	Min. 250 Ω
HART device variables	**Measured value for PV (primary value)** Temperature **Measured values for SV, TV, QV (secondary, tertiary and quaternary variable)** ▪ SV: Device temperature ▪ TV: Calibration counter ▪ QV: Calibration deviation
Supported functions	▪ Additional transmitter status ▪ NE107 diagnostics

Startup behavior / wireless HART data

Minimum start-up voltage	12 V_{DC}
Start-up current	3.58 mA
Start-up time	< 7 s, until the first valid measured value signal is present at the current output
Minimum operating voltage	12 V_{DC}
Multidrop current	4 mA
Lead time	0 s

Wiring

According to the 3-A Sanitary Standard and EHEDG electrical connecting cables must be smooth, corrosion-resistant and easy to clean.

Supply voltage

U_b = 12 to 30 V_{DC}

The device may only be powered by a power supply unit with a limited energy electric circuit in accordance with UL/EN/IEC 61010-1 chapter 9.4 or Class 2 according to UL 1310, "SELV or Class 2 cir-cuit".

Current consumption

- I = 3.58 to 23 mA
- Minimum current consumption: I = 3.58 mA, multi-drop mode I =4 mA
- Maximum current consumption: I ≤ 23 mA

Electrical connection

To prevent any kind of damage from the device electronics, leave the pins 2 and 4 unconnected. They are reserved for the connection of the configuration cable.

Do not tighten the M12 plug too much, in order to prevent damage to the device. Maximum torque: 0.4 Nm (M12 knurl)

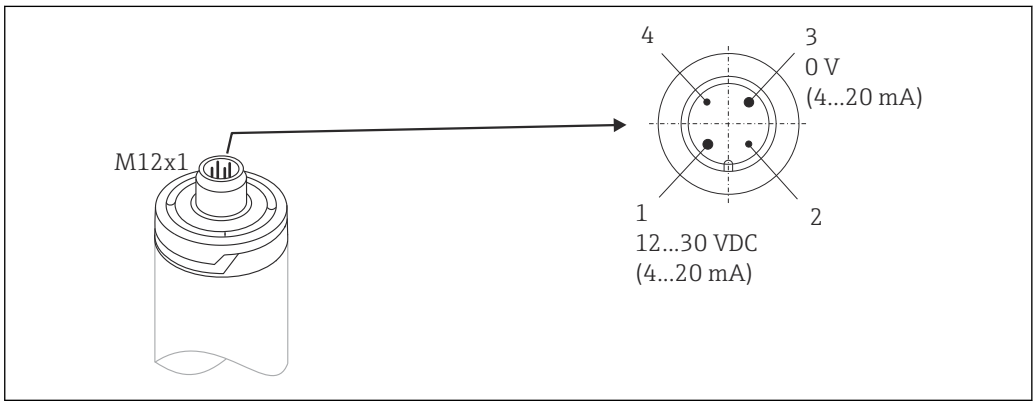

2 Pin assignment of the device connecting socket

1 *Power supply 12 to 30 V_{DC}; current output 4 to 20 mA*
2 *Reserved for configuration cable*
3 *Power supply 0 V_{DC}; current output 4 to 20 mA*
4 *Reserved for configuration cable*

Device plug connection

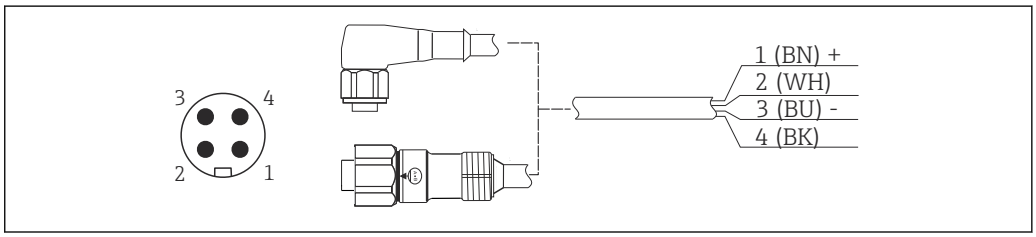

3 Pin assignment of the plug connector

1 *Power supply +, wire color brown = BN*
2 *Connection of PC configuration cable, wire color white = WH*
3 *Power supply -, wire color blue = BU*
4 *Connection of PC configuration cable, wire color black = BK*

Appropriate cord sets with straight or angle plugs are available as accessory.

Overvoltage protection

To protect against overvoltage in the power supply and signal/communication cables for the thermometer electronics, Endress+Hauser offers the HAW562 surge arrester for DIN rail mounting.

For more information see the Technical Information 'HAW562 Surge arrester' TI01012K

Performance characteristics

Reference operating conditions

- Ambient temperature: 25 °C ± 5 °C (77 °F ± 9 °F)
- Supply voltage: 24 V_{DC}

Internal calibration points

Calibration point	Tolerance	Lowest possible calibration point	Highest possible calibration point
118 °C (244.4 °F)	+1.2 K / −1.7 K	Lowest possible calibration point = 116.3 °C (241.3 °F)	Highest possible calibration point = 119.2 °C (246.6 °F)
39 °C (102.2 °F)	±2 K	Lowest possible calibration point = 37 °C (98.6 °F)	Highest possible calibration point = 41 °C (105.8 °F)

The individual calibration point of each iTHERM TrustSens device is indicated in the calibration certificate supplied ex works.

Measurement uncertainty

The given uncertainty values include non-linearity and non-repeatability and correspond to ±2 σ (95% confidence level according to the Gaussian distribution curve).

Each device is calibrated and matched by default before shipment to guarantee the given accuracy.

Calibration point [1]	Uncertainty of self-calibration	Uncertainty
118 °C (244.4 °F)	Excellent	< 0.35 K (0.63 °F)
	Standard	< 0.55 K (0.99 °F)
39 °C (102.2 °F)	Standard	< 0.49 K (0.88 °F)

1) The uncertainty of the self-calibration can be compared with the uncertainty of manual on-site calibration using a mobile dry block calibrator. Depending on the equipment used and the qualification of the person who is performing the calibration, an uncertainty of > 0.3 K (0.54 °F) is standard.

Uncertainty of the temperature sensor including digital output (HART value) at reference conditions as delivered to the customer:	
Process temperature: +20 to +135 °C (+68 to +275 °F) +135 to +160 °C (+275 to +320 °F) +160 to +170 °C (+320 to +338 °F) +170 to +180 °C (+338 to +356 °F) +180 to +190 °C (+356 to +374 °F) 0 to +20 °C (+32 to +68 °F) −20 to 0 °C (−4 to +32 °F) −40 to −20 °C (−40 to −4 °F)	 < 0.22 K (0.4 °F) < 0.38 K (0.68 °F) < 0.5 K (0.90 °F) < 0.6 K (1.08 °F) < 0.8 K (1.44 °F) < 0.27 K (0.49 °F) < 0.46 K (0.83 °F) < 0.8 K (1.44 °F)
Uncertainty of D/A converter (analog output current)	0.03 % of the measuring range

Long-term drift

Pt100 sensing element	< 1000 ppm/1000 h [1]
A/D converter (digital output - HART)	< 500 ppm/1000 h [1]
D/A converter (analog output - current)	< 100 ppm/1000 h

1) This is detected by the self-calibration

Long-term drift decreases at an exponential rate over time. This means that it may not be extrapolated in a linear way for time spans longer than the values specified above.

Ambient temperature effect

A/D converter (digital output - HART) at typical operating conditions	< 0.05 K (0.09 °F)
A/D converter (digital output - HART) at maximum operating conditions	< 0.15 K (0.27 °F)
D/A converter (analog output - current)	≤ 30 ppm/°C (2σ), related to the deviation from the reference temperature

Typical operating conditions
- Ambient temperature: 0 to +40 °C (+32 to +104 °F)
- Process temperature: 0 to +140 °C (+32 to +284 °F)
- Power supply: 18 to 24 V_{DC}

Influence of supply voltage

According to IEC 61298-2:

A/D converter (digital output - HART) at typical operating conditions	< 15 ppm/V [1)]
D/A converter (analog output - current)	< 10 ppm/V [1)]

1) Related to the deviation from the reference supply voltage

Sample calculation with Pt100, measuring range +20 to +135 °C (+68 to +275 °F), ambient temperature +25 °C (+77 °F), supply voltage 24 V:

Measured error digital	0.220 K (0.396 °F)
Measured error D/A = 0.03 % x 150 °C (302 °F)	0.045 K (0.081 °F)
Measured error digital value (HART):	0.220 K (0.396 °F)
Measured error analog value (current output): √(Measured error digital² + Measured error D/A²)	0.225 K (0.405 °F)

Sample calculation with Pt100, measuring range +20 to +135 °C (+68 to +275 °F), ambient temperature +35 °C (+95 °F), supply voltage 30 V:

Measured error digital	0.220 K (0.396 °F)
Measured error D/A = 0.03 % x 150 °C (302 °F)	0.045 K (0.081 °F)
Influence of ambient temperature (digital)	0.050 K (0.090 °F)
Influence of ambient temperature (D/A) = (35 °C - 25 °C) x (30 ppm/°C x 150 °C)	0.045 K (0.081 °F)
Influence of supply voltage (digital) = (30 V - 24 V) x 15 ppm/V x 150 °C	0.014 K (0.025 °F)
Influence of supply voltage (D/A) = (30 V - 24 V) x 10 ppm/V x 150 °C	0.009 K (0.016 °F)
Measured error digital value (HART): √(Measured error digital² + Influence of ambient temperature (digital)² + Influence of supply voltage (digital)²	**0.226 K (0.407 °F)**
Measured error analog value (current output): √(Measured error digital² + Measured error D/A² + Influence of ambient temperature (digital)² + Influence of ambient temperature (D/A)² + Influence of supply voltage (digital)² + Influence of supply voltage (D/A)²	**0.235 K (0.423 °F)**

Response time

Tests in water at 0.4 m/s (1.3 ft/s), according to IEC 60751; 10 K temperature step change. t_{63} / t_{90} are defined as the time that passes until the instrument output reaches 63% / 90% of the new value.

Response time with heat transfer paste [1)]

Protection tube	Shape of tip	Insert	t_{63}	t_{90}
Ø¼ in	Reduced 3/16 in x 0.79 in	Ø3 mm (0.12 in)	2.9 s	5.4 s
Ø⅜ in	Straight	Ø6 mm (0.24 in)	9.1 s	17.9 s

Protection tube	Shape of tip	Insert	t_{63}	t_{90}
	Reduced 3/16 in x 0.79 in	Ø3 mm (0.12 in)	2.9 s	5.4 s
Ø1/2 in	Straight	Ø6 mm (0.24 in)	10.9 s	24.2 s

1) Between the insert and the protection tube.

Response time without heat transfer paste

Protection tube	Shape of tip	Insert	t_{63}	t_{90}
Ø1/4 in	Reduced 3/16 in x 0.79 in	Ø3 mm (0.12 in)	7.4 s	17.3 s
Ø3/8 in	Straight	Ø6 mm (0.24 in)	24.4 s	54.1 s
	Reduced 3/16 in x 0.79 in	Ø3 mm (0.12 in)	7.4 s	17.3 s
Ø1/2 in	Straight	Ø6 mm (0.24 in)	30.7 s	74.5 s

Calibration

Calibration of thermometers

Calibration refers to the comparison between the display of a piece of measuring equipment and the true value of a variable provided by the calibration standard under defined conditions. The aim is to determine the deviation or measurement errors of the UUT's measured values from the true value of the measured variable. Two different methods are used for thermometers:

- Calibration at fixed points, e.g. at the freezing point, the solidification point, of water at 0 °C
- Comparison method using a precise reference thermometer

The thermometer to be calibrated must display the fixed point temperature or the temperature of the reference thermometer as accurately as possible. Temperature-controlled calibration baths or special calibration furnaces with homogeneous distribution of temperature are typically used for thermometer calibrations. The unit under test (UUT) and the reference thermometer are placed closely together into the bath or furnace at a sufficient depth.

The measurement uncertainty can increase due to heat conduction errors and short immersion lengths. The existing measurement uncertainty is listed on the individual calibration certificate.

For accredited calibrations according to IEC/ISO 17025, the measurement uncertainty must not be twice as high as the accredited measurement uncertainty of the laboratory. If the limit value is exceeded, only a factory calibration can be carried out.

For manual calibration in calibration baths, the maximum immersion length of the device ranges from the sensor tip to the lower part of the electronic housing.

Do not immerse the housing in the calibration bath.

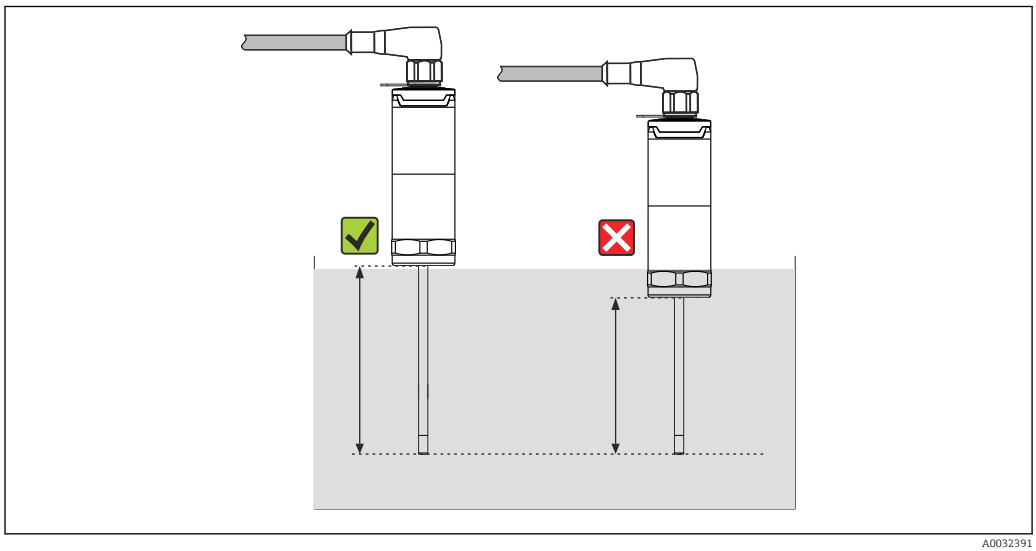

A0032391

Self-calibration

The self-calibration procedure uses the Curie temperature (Tc) of a reference material as a built-in temperature reference. A self-calibration is performed automatically when the process temperature

(Tp) falls below the nominal Curie Temperature (Tc) of the device. At the Curie temperature, a phase change of the reference material takes place, which is associated with a change in its electrical properties. The electronics unit detects this change automatically and simultaneously calculates the deviation of the measured Pt100 temperature from the known Curie temperature, which is a physical fixed point. The iTHERM TrustSens thermometer is calibrated. A green flashing LED light indicates the ongoing self-calibration process. Subsequently the thermometer electronics stores the results of this calibration. The calibration data can be read via an asset management software such as FieldCare or DeviceCare. A self-calibration certificate can be created automatically. This in situ self-calibration makes it possible to continuously and repeatedly monitor changes to the properties of the Pt100 sensor and the electronics unit. As the in situ calibration is being performed under real ambient or process conditions (e.g. heating of electronics), the result is closer to reality than a sensor calibration under laboratory conditions.

Process criteria for self-calibration

To ensure a valid self-calibration within the given measurement accuracy, the process temperature characteristics must fulfill the criteria, which are checked by the device automatically. Based on this, the device is ready to perform a self-calibration under the following conditions:

Calibration point 118 °C (244.4 °F)
Process temperature > calibration temperature + 3 K for 25 s before cooling down; t1 - t2.
Cooling rate: 0.5 to 16.5 K/min (0.9 to 29.7 °F/min), while the process temperature crosses the Curie temperature; t2 - t3 + 10 s. The process temperature ideally declines continuously below 116 °C (240.8 °F). A valid self-calibration process has been completed when the green LED flashes for 5 s at a frequency of 5 Hz.

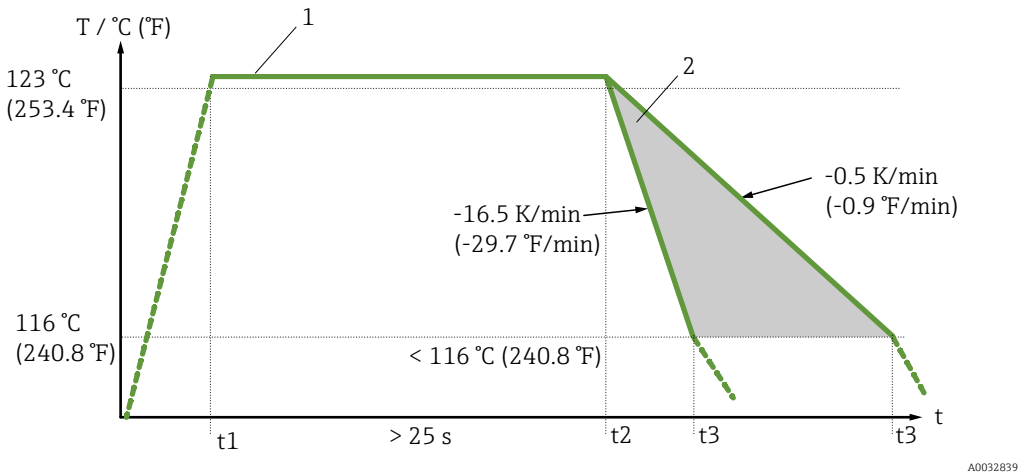

4 Process temperature profile required for self-calibration

1 Process temperature 123 °C (253.4 °F)
2 Permitted self-calibration range

Calibration point 39 °C (102.2 °F)
Process temperature > calibration temperature + 4 K for 60 s before cooling down; t1 - t2.
Cooling rate: 1.5 to 100 K/min (2.7 to 180 °F/min), while the process temperature crosses the Curie temperature; t2 - t3 + 10 s. The process temperature ideally declines continuously below 36 °C (96.8 °F). A valid self-calibration process has been completed when the green LED flashes for 5 s at a frequency of 5 Hz.

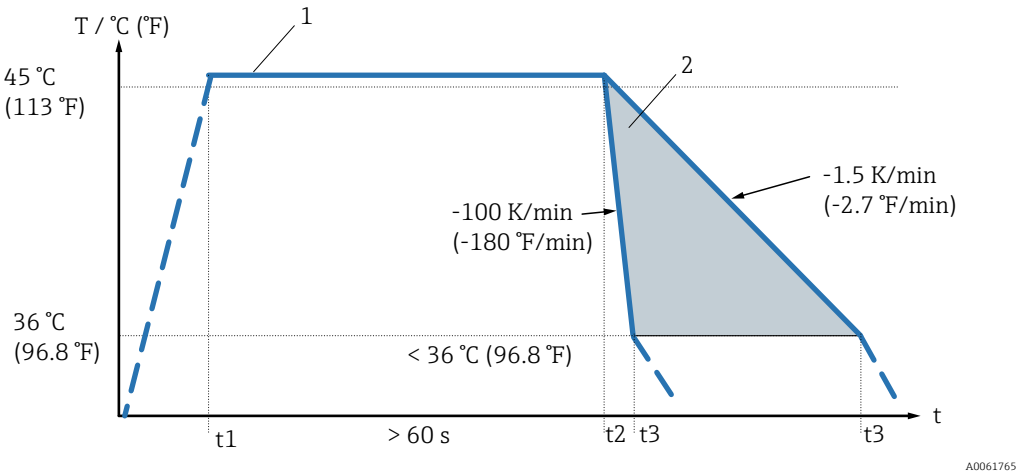

5 Process temperature profile required for self-calibration

1 Process temperature
2 Permitted self-calibration range

Calibration monitoring

Available in conjunction with the Advanced Data Manager Memograph M (RSG45).

Application package:
- Up to 20 devices can be monitored via the HART interface
- Self-calibration data displayed on screen or via the web server
- Generation of a calibration history
- Creation of a calibration certificate as an RTF file directly at the RSG45
- Evaluation, analysis and further processing of the calibration data using "Field Data Manager" (FDM) analysis software

Insulation resistance

Insulation resistance ≥ 100 MΩ at ambient temperature, measured between the terminals and the outer jacket with a minimum voltage of 100 V_{DC}.

Installation

Orientation

No restrictions once self-draining is guaranteed in the process. If there is an opening to detect leaks at the process connection, this opening must be at the lowest possible point.

Installation instructions

The immersion length of the thermometer can influence the measurement accuracy. If the immersion length is too small then measurement errors are caused by heat conduction via the process connection. For installation in a pipe, an immersion length is therefore recommended that ideally corresponds to half the pipe diameter.

Installation options: Pipes, tanks or other plant components

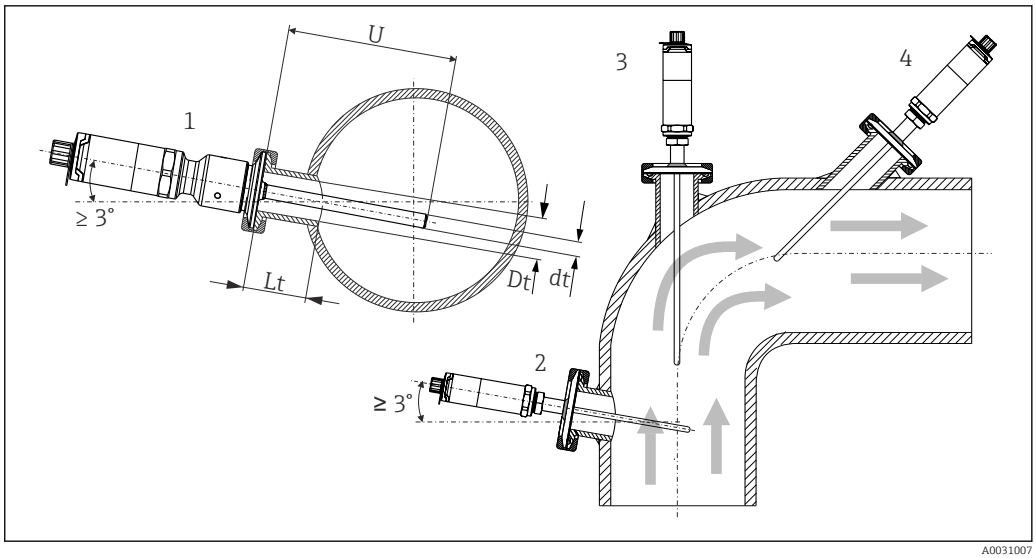

6 Installation examples

1, 2 Perpendicular to the flow direction, installed at a min. angle of 3° to ensure self-draining
3 On elbows
4 Inclined installation in pipes with a small nominal diameter
U Immersion length

The requirements of the EHEDG and the 3-A Sanitary Standard must be adhered to.

Installation instructions EHEDG/cleanability: Lt ≤ (Dt-dt)

Installation instructions 3-A/cleanability: Lt ≤ 2 (Dt-dt)

In the case of pipes with a small nominal diameter, it is advisable for the tip of the thermometer to project well into the process so that it extends past the pipe axis. Installation at an angle (4) could be another solution. When determining the immersion length or installation depth, all the parameters of the thermometer and of the medium to be measured must be taken into account (e.g. flow velocity, process pressure).

Pay attention to the exact position of the sensor element in the thermometer tip.

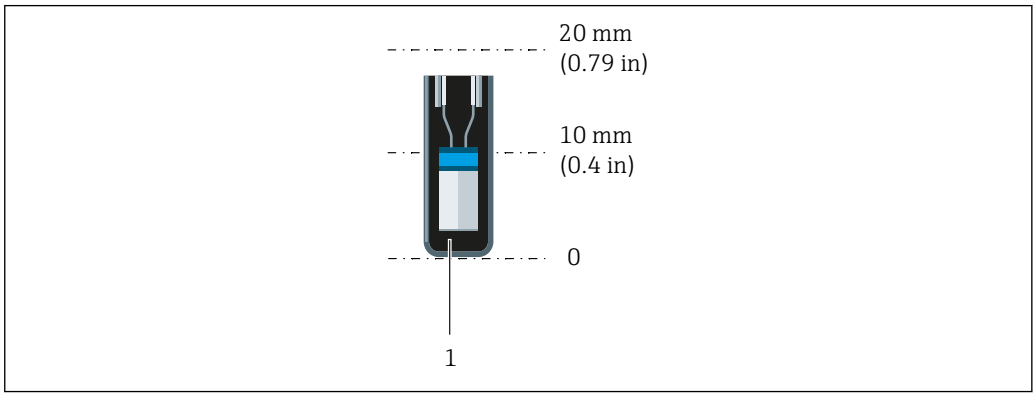

1 iTHERM TrustSens for 5 to 7 mm (0.2 to 0.28 in)

To keep the influence of heat dissipation to a minimum and to achieve the best possible measurement results, 20 to 25 mm (0.79 to 0.98 in) should be in contact with the medium in addition to the actual sensor element.

This results in the following recommended minimum immersion lengths
iTHERM TrustSens 30 mm (1.18 in)

It is particularly important to take this into consideration for tee thermowells, as the immersion length is very short on account of their design, and the measurement error is higher as a result. It is therefore recommended to use elbow thermowells with iTHERM TrustSens sensors.

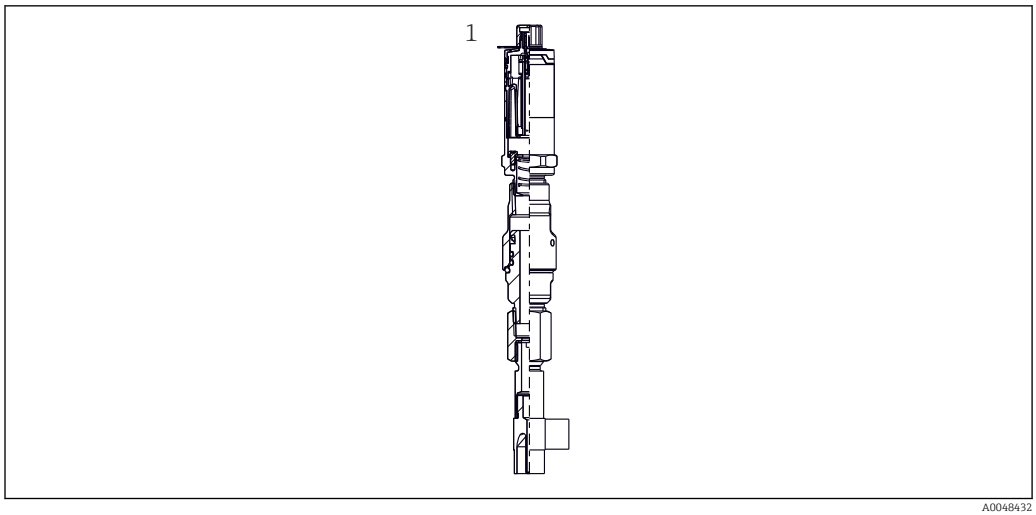

A0048432

7 Process connections for thermometer installation in pipes with small nominal diameters

1 Elbow thermowell for welding in as per DIN 11865/ASME BPE

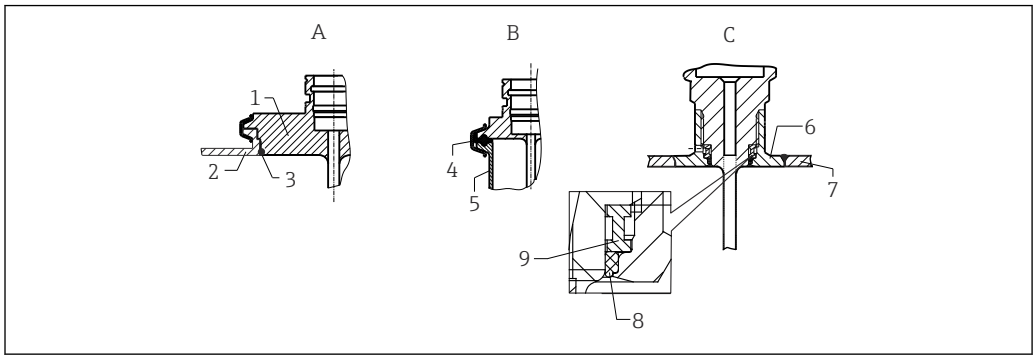

A0046716

8 Detailed installation instructions for hygiene-compliant installation (depends on the version ordered)

A Varivent process connection for VARINLINE housing
1 Sensor with Varivent connection
2 Counterpart connection
3 O-ring
B Clamp according to ISO 2852
4 Molded seal
5 Counterpart connection
C Liquiphant M G1" process connection, horizontal installation
6 Weld-in adapter
7 Vessel wall
8 O-ring
9 Thrust collar

NOTICE

The following actions must be taken if a sealing ring (O-ring) or seal fails:

- The thermometer must be removed.
- The thread and the O-ring joint/sealing surface must be cleaned.
- The sealing ring or seal must be replaced.
- CIP must be performed after installation.

The counterpieces for the process connections and the seals or sealing rings are not supplied with the thermometer. Liquiphant M weld-in adapters with associated seal kits are available as accessories.

In the case of weld-in connections, exercise the necessary degree of care when performing the welding work on the process side:

1. Use suitable welding material.

2. Flush-weld or weld with welding radius ≥ 3.2 mm (0.13 in).
3. Avoid crevices, folds and gaps.
4. Ensure the surface is honed and polished, Ra ≤ 0.76 µm (30 µin).

1. As a general rule, the thermometers should be installed in such a way that does not impact their ability to be cleaned (the requirements of the 3-A Sanitary Standard must be observed).
2. The Varivent, Liquiphant M weld-in adapters and Ingold (+ weld-in adapters) connections enable flush-mounted installation.

Environment

Ambient temperature range

Ambient temperature T_a	−40 to +60 °C (−40 to +140 °F)
Maximum electronics temperature T	−40 to +85 °C (−40 to +185 °F)

Storage temperature range

−40 to +85 °C (−40 to +185 °F)

Climate class

As per IEC 60654-1, Class Dx

Degree of protection

- IP54 for the version without thermowell provided for installation in an existing thermowell
- IP65/67 for housing with LED status indication
- IP69 for housing without LED status indication and only if appropriate cord sets with M12x1 coupling are connected.

The specified IP65/67 or IP69 rating for the compact thermometer is only guaranteed if an approved M12 connector with a suitable IP rating is installed according to the instructions in this manual.

Shock and vibration resistance

Endress+Hauser temperature sensors meet the requirements of IEC 60751 which specify shock and vibration resistance of 3g in the range of 10 to 500 Hz. This also applies to the quick-fastening iTHERM QuickNeck.

Electromagnetic compatibility (EMC)

EMC as per all relevant requirements of the IEC/EN 61326 series and NAMUR Recommendation EMC (NE21). For details, refer to the Declaration of Conformity. All tests were passed both with and without ongoing digital HART® communication.

All EMC measurements were performed with a turndown (TD) = 5:1. Maximum fluctuations during the EMC tests : < 1% of the measuring span.

Interference immunity according to the IEC/EN 61326 series, industrial requirements.

Interference emission according to the IEC/EN 61326 series, electrical equipment Class B.

Process

Process temperature range

- −40 to +160 °C (−40 to +320 °F)
- Optional −40 to +190 °C (−40 to +374 °F)

The reference sensor is defective if the temperature range of −45 to +200 °C (−49 to +392 °F) is exceeded. Temperature measurement continues, but self-calibration is out of service.

Thermal shock

Thermal shock resistance in CIP/SIP processes with a temperature increase and decrease from +5 to +130 °C (+41 to +266 °F) within 2 seconds.

Process pressure range

The maximum static process pressure is limited by the process connection, see respective section. → 📄 20

It is possible to verify the mechanical loading capacity depending on the installation and process conditions using the online TW Sizing Module for thermowells in the Endress+Hauser Applicator software. This is valid for DIN thermowell calculations. See 'Accessories' section.

Example of the permitted flow velocity depending on the immersion length and process medium

The maximum allowable flow velocity to which the thermometer can be exposed decreases as the immersion length of the measuring insert in the flowing medium increases. In addition, it is dependent on the diameter of the thermometer tip, the process medium type, the process temperature and the process pressure. The following figures exemplify the maximum permitted flow velocities in water at a process pressure of 40 bar (580 PSI) and superheated steam at a process pressure of 6 bar (87 PSI).

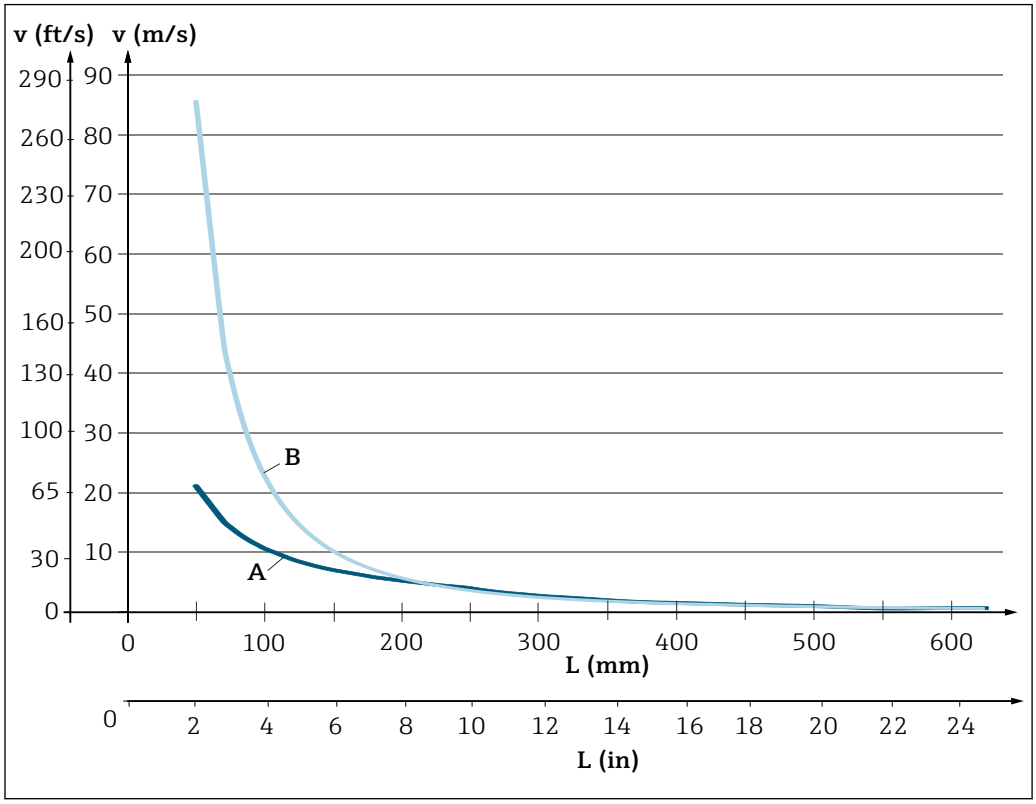

9 Permitted flow velocity, thermowell diameter 9 mm (0.35 in)

A Medium water at T = 50 °C (122 °F)
B Medium superheated steam at T = 160 °C (320 °F)
L Immersion length exposed to flow
v Flow velocity

State of aggregation of the medium

Gaseous or liquid (also with high viscosity, e.g. yogurt).

Mechanical construction

Design, dimensions

The design of the thermometer depends on the thermowell version used:
- Thermometer without a thermowell
- Diameter ¼ in
- Diameter ⅜ in
- Diameter ½ in

Various dimensions, such as immersion length U for instance, are variable values and are therefore shown as items in the following dimensional drawings.

Variable dimensions:

Item	Description
E	Extension neck length, variable depending on the configuration or predefined for the version with iTHERM QuickNeck
L	Thermowell length (U+T)
B	Thermowell base thickness: Predefined, depends on thermowell version (see also the individual table data)
T	Length of thermowell lagging: Variable or predefined, depends on thermowell version (see also the individual table data)
U	Immersion length: Variable, depending on the configuration
ØID	Insert diameter 6 mm (0.24 in) or 3 mm (0.12 in)

Without thermowell

For installation in an existing thermowell

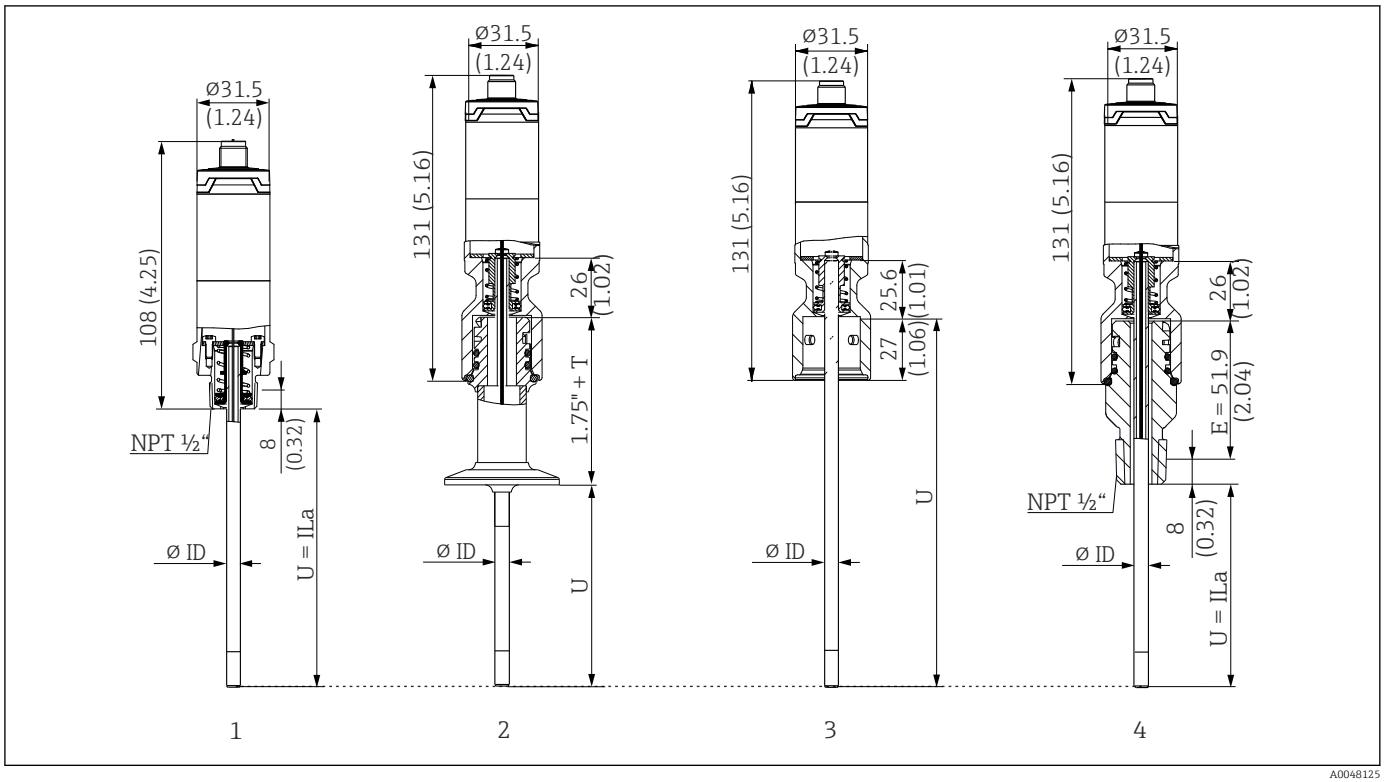

A0048125

1 *Thread NPT ½", spring-loaded version*
2 *iTHERM QuickNeck extension neck separable – quick-fastening*
3 *iTHERM QuickNeck (top half), spring-loaded version for thermowell with iTHERM QuickNeck connection (bottom half), Ø ID = 3 mm or 6 mm*
4 *iTHERM QuickNeck NPT ½"*

Item	Description
$U_{(thermowell)}$	Immersion length of the thermowell available at point of installation
$T_{(thermowell)}$	Shaft length of thermowell available at point of installation
E	Length of the extension neck at point of installation (provided one is available)
$B_{(thermowell)}$	Base thickness of thermowell

Pay attention to the following equations when calculating the immersion length U for immersion into an existing thermowell TT412:

Version 1	$U = U_{(thermowell)} + T_{(thermowell)}$ + 39.45 mm (1.55 in) - $B_{(thermowell)}$
Version 2	$U = U_{(thermowell)} + T_{(thermowell)}$ + 20.45 mm (0.8 in) - $B_{(thermowell)}$

Thermowell diameter (¼, 3/8, ½ in)

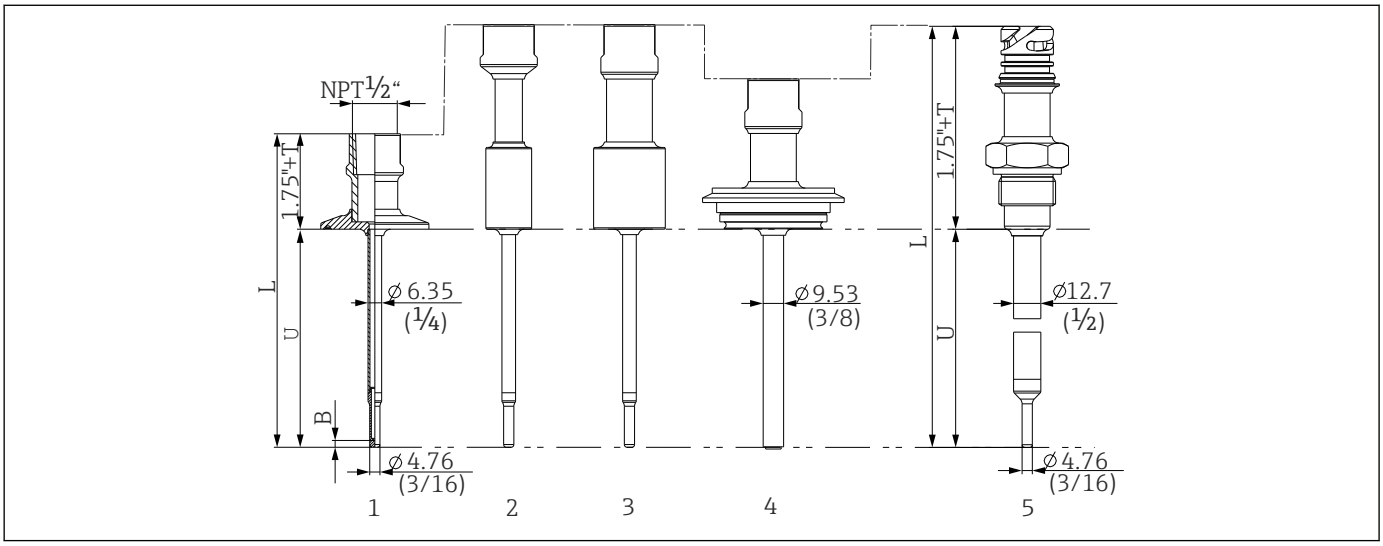

A0033718

10 Thermowell with NPT ½" neck connection and various process connection versions:

1 Tri-Clamp
2 Cylindrical weld-in adapter ΦD ¾" NPS
3 Cylindrical weld-in adapter ΦD 1" NPS
4 Varivent®
5 Liquiphant adapter with QuickNeck

Item	Version	Length
Thermowell length L	Independent of the version	Variable, depending on the configuration
Length of thermowell shaft T [1)]	Tri-clamp with NPT Tri-clamp with QuickNeck Varivent® with NPT Varivent® with QuickNeck Liquiphant with NPT Liquiphant with QuickNeck Weld-in with NPT Weld-in with QuickNeck	0-6" 1-6" 1-6" 1.5-6" 2-6" 2-6" 2-6" 2-6"
Immersion length U	Independent of the version	Variable, depending on the configuration
Bottom thickness B	**6.35 mm (¼ in) Thermowell:** Reduced tip Φ4.76 mm (3/16 in)	3.2 mm (0.13 in)

Item	Version	Length
	9.53 mm (3/8 in) Thermowell: Reduced tip ϕ4.76 mm (3/16 in) Straight tip	 3.2 mm (0.13 in) 3 mm (0.12 in)
	12.7 mm (1/2 in) Thermowell: Reduced tip ϕ4.76 mm (3/16 in) Straight tip	 3.2 mm (0.13 in) 6.3 mm (0.25 in)

1) Variable, depending on the configuration

With tee or elbow thermowell version

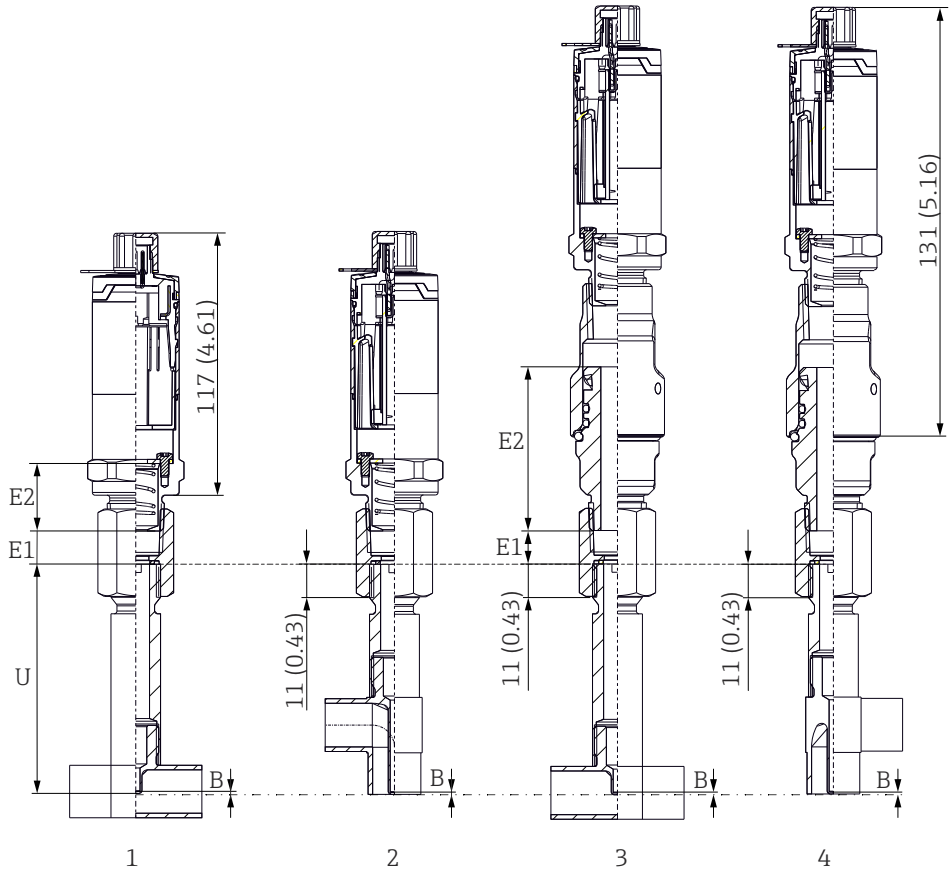

A0048280

1 *Thermometer with tee thermowell*
2 *Version with elbow thermowell*
3 *Thermometer with quick-fastening iTHERM QuickNeck version and tee thermowell*
4 *Thermometer with quick-fastening iTHERM QuickNeck and elbow thermowell*

Item	Version	Length
Extension neck E	Without extension neck	-
	Replaceable extension neck, Ø9 mm (0.35 in)	Variable, depending on the configuration
	iTHERM QuickNeck	71.05 mm (2.79 in)
Bottom thickness B	Independent of the version	0.7 mm (0.03 in)
Immersion length U	G3/8" connection QuickNeck connection	82.7 mm (3.26 in)

- Pipe sizes according to DIN11865 series A (DIN), B (ISO) and C (ASME BPE)
- Nominal diameters > DN25, with 3-A symbol
- IP69 protection
- Material 1.4435+316L, delta ferrite content < 0.5%
- Temperature measurement range: −60 to +200 °C (−76 to +392 °F)
- Pressure range: PN25 according to DIN11865

Weight

0.2 to 2.5 kg (0.44 to 5.5 lbs) for standard options.

Materials

The temperatures for continuous operation specified in the following table are only intended as reference values for use of the various materials in air and without any significant compressive load. The maximum operating temperatures can be reduced considerably in cases where abnormal conditions such as high mechanical load occur or in aggressive media.

Name	Short formula	Recommended max. temperature for continuous use in air	Properties
AISI 316L (corresponds to 1.4404 or 1.4435)	X2CrNiMo17-13-2, X2CrNiMo18-14-3	650 °C (1 202 °F) [1]	▪ Austenitic stainless steel ▪ High corrosion resistance in general ▪ Particularly high corrosion resistance in chlorine-based and acidic, non-oxidizing atmospheres through the addition of molybdenum (e.g. phosphoric and sulfuric acids, acetic and tartaric acids with a low concentration) ▪ Increased resistance to intergranular corrosion and pitting ▪ The wetted part is a thermowell made of 316L or 1.4435+316L passivated with 3% sulfuric acid.
1.4435+316L, delta ferrite < 1% or < 0.5%	With regard to analytical limits, the specifications of both materials (1.4435 and 316L) are met simultaneously. In addition, the delta ferrite content of the parts in contact with the process is limited to <1% or <0.5%. ≤3% for weld seams (in accordance with Basel Standard II)		

1) Can be used to a limited extent up to 800 °C (1472 °F) for low compressive loads and in non-corrosive media. Contact your Endress+Hauser sales team for further information.

Surface roughness

Specifications for product wetted parts in accordance with EN ISO 21920:

Standard surface, mechanically polished [1]	R_a ≤ 0.76 µm (30 µin)
Mechanically polished [1], buffed [2]	R_a ≤ 0.38 µm (15 µin) [3]
Mechanically polished [1], buffed and electropolished	R_a ≤ 0.38 µm (15 µin) [3]+ electropolished

1) Or equivalent treatment that guarantees R_a max.
2) Not compliant with ASME BPE
3) T16% for direct-contact measuring inserts without thermowell, not compliant with ASME BPE

Thermowell

Process connections

All dimensions in mm (inches).

Model	Type of fitting	Dimensions			Technical properties
		ØD	ØA	h	
SMS 1147 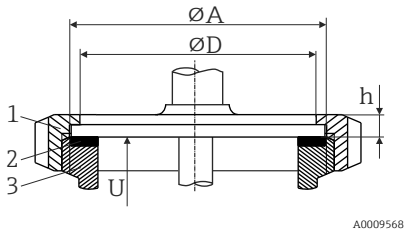 *1 Cap nut* *2 Sealing ring* *3 Counterpart connection*	DN25	32 mm (1.26 in)	35.5 mm (1.4 in)	7 mm (0.28 in)	$P_{max.}$ = 6 bar (87 psi)
	DN38	48 mm (1.89 in)	55 mm (2.17 in)	8 mm (0.31 in)	
	DN51	60 mm (2.36 in)	65 mm (2.56 in)	9 mm (0.35 in)	
The counterpart connection must fit the sealing ring and fix it in place.					

The 316L compression fittings can only be used once due to deformation. This applies to all the compression fitting components. A replacement compression fitting must be secured at another point (grooves in thermowell).

PEEK compression fittings must never be used at a temperature that is lower than the temperature present when the compression fitting is secured. This is because the fitting would no longer be leak-tight as a result of heat contraction of the PEEK material.

SWAGELOK or similar fittings are strongly recommended for higher requirements.

Process connections

All dimensions in mm (inches).

Weld-in

Type	Version	Dimensions	Technical properties
Weld-in adapter 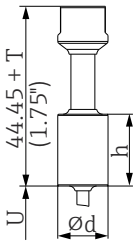 	Cylindrical ½" NPS	Ød = ½" NPS, h = 38.1 mm (1.5 in), U = immersion length from lower edge, T = min. 50.8 mm (2 in)	▪ $P_{max.}$ depends on the weld-in process ▪ With 3-A symbol and EHEDG certification ▪ ASME BPE compliance
	Cylindrical ¾" NPS	Ød = ¾" NPS, h = 38.1 mm (1.5 in), U = immersion length from lower edge, T = min. 50.8 mm (2 in)	
	Cylindrical 1" NPS	Ød = 1" NPS, h = 38.1 mm (1.5 in), U = immersion length from lower edge, T = min. 50.8 mm (2 in)	

Releasable process connection

Type	Version	Dimensions		Technical properties	Conformity
	Ød: [1]	ØD	Øa		
Clamp according to DIN 32676 [2] 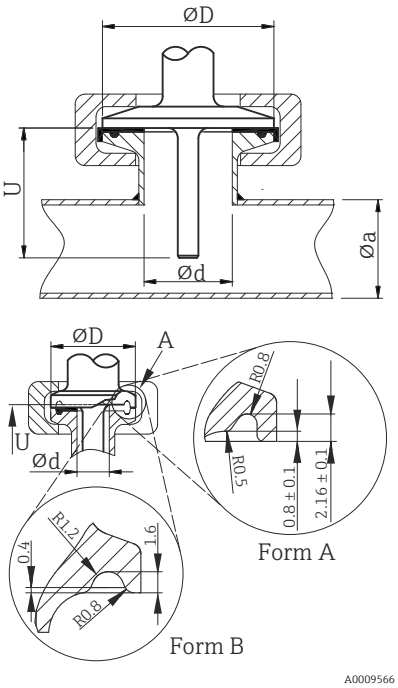 Form A: In compliance with ASME BPE Type A Form B: In compliance with ASME BPE Type B and DIN 32676	Tri-clamp ¾" (DN18), Form A [3]	25 mm (0.98 in)	-	▪ $P_{max.}$ = 16 bar (232 psi), depends on clamp ring and suitable seal ▪ With 3-A symbol	ASME BPE Type A; DIN 32676
	Clamp ½" (DN12 - 21.3) Form B	34 mm (1.34 in)	16 to 25.3 mm (0.63 to 0. 99 in)		DIN 32676
	Clamp 1" - 1½" (DN25 - 38) Form B	50.5 mm (1.99 in)	29 to 42.4 mm (1.14 to 1. 67 in)	▪ $P_{max.}$ = 16 bar (232 psi), depends on clamp ring and suitable seal ▪ With 3-A symbol and EHEDG certification (combined with Combifit seal) ▪ Can be used with 'Novaseptic Connect (NA Connect)' which enables flush-mount installation	ASME BPE Type B; DIN 32676
	Clamp 2" (DN40 - 51) Form B	64 mm (2.52 in)	44.8 to 55. 8 mm (1.76 to 2. 2 in)		
	Clamp 2½" (DN63.5) Form B	77.5 mm (3.05 in)	68.9 to 75. 8 mm (2.71 to 2. 98 in)		ASME BPE Type B; ISO 2852
	Clamp 3" (DN70 - 76.5) Form B	91 mm (3.58 in)	> 75.8 mm (2.98 in)		ASME BPE Type B; DIN 32676

1) Pipes in accordance with ISO 2037 and BS 4825 Part 1
2) replaces ISO 2852
3) Tri-clamp ¾" only possible with thermowell diameter 6.35 mm (¼ in) or 9.53 mm (⅜ in)

Removable process connection for Liquiphant weld-in adapter (ISO 228)

Type	Version G	Dimensions			Technical properties
		L1 thread length	A	1 (SW/AF)	
Thread according to ISO 228 (for Liquiphant weld-in adapter) 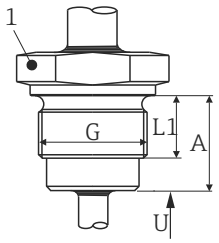 	G¾" for FTL20/31/33 adapter	16 mm (0.63 in)	25.5 mm (1 in)	32	▪ $P_{max.}$ = 25 bar (362 psi) at max. 150 °C (302 °F) ▪ $P_{max.}$ = 40 bar (580 psi) at max. 100 °C (212 °F) ▪ For more information about hygienic compliance in conjunction with FTL31/33/50 adapters, see Technical Information TI00426F.
	G¾" for FTL50 adapter				
	G1" for FTL50 adapter	18.6 mm (0.73 in)	29.5 mm (1.16 in)	41	

Removable process connection Varivent®

Type	Version [1]	Dimensions				Technical properties	
		ΦD	ΦA	ΦB	h	$P_{max.}$	
Varivent® 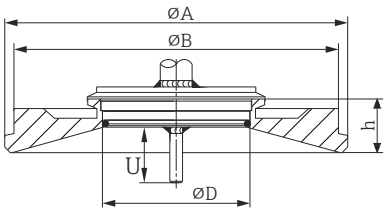	Type B	31 mm (1.22 in)	105 mm (4.13 in)	-	22 mm (0.87 in)	10 bar (145 psi)	▪ With 3-A symbol and EHEDG certification ▪ ASME BPE compliance
	Type F	50 mm (1.97 in)	145 mm (5.71 in)	135 mm (5.31 in)	24 mm (0.95 in)		
	Type N	68 mm (2.67 in)	165 mm (6.5 in)	155 mm (6.1 in)	24.5 mm (0.96 in)		

The VARINLINE® housing connection flange is suitable for welding into the conical or torispherical head in tanks or containers with a small diameter (≤ 1.6 m (5.25 ft)) and up to a wall thickness of 8 mm (0.31 in).
Varivent® Type F cannot be used for installations in pipes in combination with the VARINLINE® housing connection flange.

1) Options depend on product and configuration

Type	Technical properties
Varivent® for VARINLINE® housing for installation in pipes 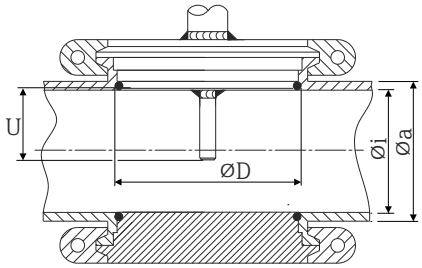	▪ With 3-A symbol and EHEDG certification ▪ ASME BPE compliance

Version [1]	Dimensions			$P_{max.}$
	ΦD	Φi	Φa	
Type N, according to DIN 11866, series A	68 mm (2.67 in)	DN40: 38 mm (1.5 in)	DN40: 41 mm (1.61 in)	DN40 to DN65: 16 bar (232 psi)
		DN50: 50 mm (1.97 in)	DN50: 53 mm (2.1 in)	
		DN65: 66 mm (2.6 in)	DN65: 70 mm (2.76 in)	
		DN80: 81 mm (3.2 in)	DN80: 85 mm (3.35 in)	DN80 to DN150: 10 bar (145 psi)
		DN100: 100 mm (3.94 in)	DN100: 104 mm (4.1 in)	
		DN125: 125 mm (4.92 in)	DN125: 129 mm (5.08 in)	
		DN150: 150 mm (5.9 in)	DN150: 154 mm (6.06 in)	
Type N, according to EN ISO 1127, series B	68 mm (2.67 in)	38.4 mm (1.51 in)	42.4 mm (1.67 in)	42.4 mm (1.67 in) to 60.3 mm (2.37 in): 16 bar (232 psi)
		44.3 mm (1.75 in)	48.3 mm (1.9 in)	
		56.3 mm (2.22 in)	60.3 mm (2.37 in)	
		72.1 mm (2.84 in)	76.1 mm (3 in)	76.1 mm (3 in) to 114.3 mm (4.5 in): 10 bar (145 psi)
		82.9 mm (3.26 in)	42.4 mm (3.5 in)	
		108.3 mm (4.26 in)	114.3 mm (4.5 in)	
Type N, according to DIN 11866, series C	68 mm (2.67 in)	OD 1½": 34.9 mm (1.37 in)	OD 1½": 38.1 mm (1.5 in)	OD 1½" to OD 2½": 16 bar (232 psi)
		OD 2": 47.2 mm (1.86 in)	OD 2": 50.8 mm (2 in)	
		OD 2½": 60.2 mm (2.37 in)	OD 2½": 63.5 mm (2.5 in)	

Type				Technical properties
Type N, according to DIN 11866, series C	68 mm (2.67 in)	OD 3": 73 mm (2.87 in)	OD 3": 76.2 mm (3 in)	OD 3" to OD 4": 10 bar (145 psi)
		OD 4": 97.6 mm (3.84 in)	OD 4": 101.6 mm (4 in)	
Type F, according to DIN 11866, series C	50 mm (1.97 in)	OD 1": 22.2 mm (0.87 in)	OD 1": 25.4 mm (1 in)	16 bar (232 psi)

1) Options depend on product and configuration

Due to the small immersion length U, the use of iTHERM QuickSens inserts is recommended.

Type	Version		Dimensions in mm (inches)			Technical properties
			ØD	L	s [1]	
Tee thermowell for weld-in as per DIN 11865 (Part C) 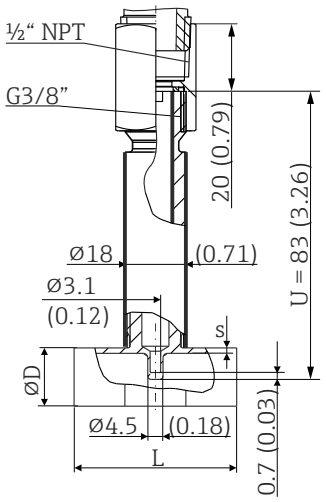	Part C [2]	DN12.7 PN25 (½")	12.7 mm (0.5 in)	48 mm (1.89 in)	1.65 mm (0.065 in)	▪ $P_{max.}$ = 25 bar (362 psi) ▪ R_a ≤ 0.38 µm (15 µin)+ electropolished [3]
		DN19.05 PN25 (¾")	19.05 mm (0.75 in)			
		DN25.4 PN25 (1")	19.05 mm (0.75 in)			
		DN38.1 PN25 (1½")	38.1 mm (1.5 in)			

1) Wall thickness
2) Dimensions as per ASME BPE
3) Exception: internal welded seams

Type	Version		Dimensions				Technical properties
			ØD	L1	L2	s [1]	
Elbow thermowell for weld-in as per DIN 11865 (Part C) 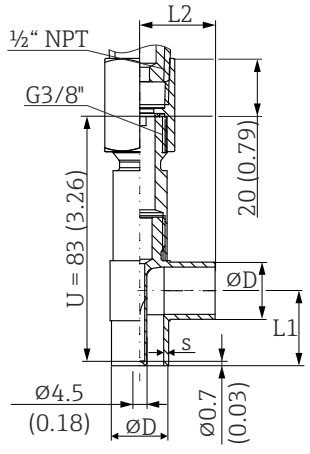	Part C	DN12.7 PN25 (½") [2]	12.7 mm (0.5 in)	22 mm (0.87 in)	24 mm (0.94 in)	1.65 mm (0.065 in)	▪ $P_{max.}$ = 25 bar (362 psi) ▪ R_a ≤ 0.38 µm (15 µin)+ electropolished [3]
		DN19.05 PN25 (¾")	19.05 mm (0.75 in)	25 mm (0.98 in)			

Type	Version		Dimensions				Technical properties
			ØD	L1	L2	s [1]	
		DN25.4 PN 25 (1")	19.05 mm (0.75 in)	28 mm (1.1 in)			
		DN38.1 PN25 (1½")	38.1 mm (1.5 in)	35 mm (1.38 in)			

1) Wall thickness
2) Dimensions as per ASME BPE
3) Exception: internal welded seams

Due to the small immersion length U, the use of iTHERM QuickSens inserts is recommended.

Shape of tip

The thermal response time, the reduction of the flow cross-section and the mechanical load that occurs in the process are the criteria that matter when selecting the shape of the tip. Advantages of using reduced or tapered thermometer tips:

- A smaller tip shape has less impact on the flow characteristics of the pipe carrying the medium.
- The flow characteristics are optimized, thereby increasing the stability of the thermowell.
- Endress+Hauser offers users a range of thermowell tips to meet every requirement:
  - Straight tip
  - Reduced tip of Φ4.76 mm (3/16 in): Walls of lower thickness significantly reduce the response times of the overall measuring point
  - Reduced tip for tee and elbow thermowell with Φ4.5 mm (0.18 in)

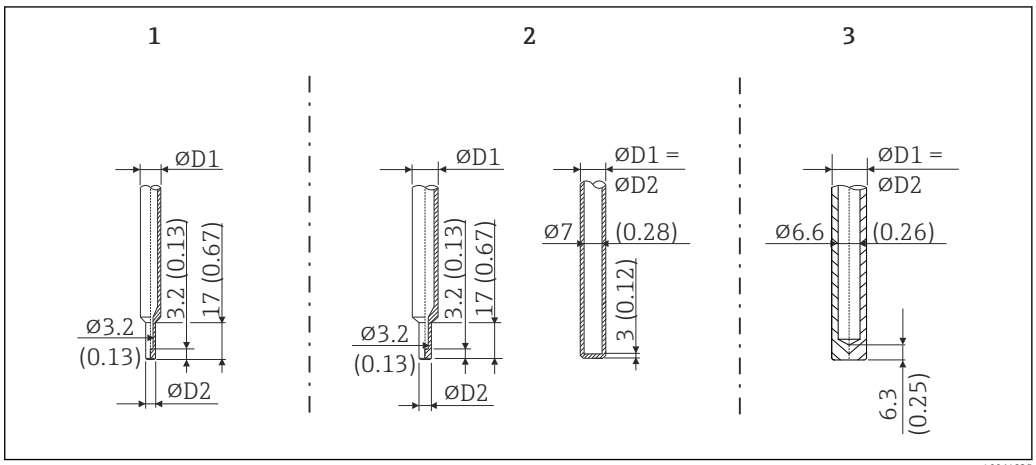

A0061835

Item no.	Thermowell (ΦD1)	Tip (ΦD2)	Insert (ΦID)
1	Φ6.35 mm (¼ in)	Reduced tip of Φ4.76 mm (3/16 in)	Φ3 mm (0.12 in)
2	Φ9.53 mm (⅜ in)	▪ Reduced tip of Φ4.76 mm (3/16 in) ▪ Straight tip: ΦD1 = ΦD2	▪ Φ3 mm (0.12 in) ▪ Φ6 mm (0.24 in)
3	Φ12.7 mm (½ in)	Straight tip: ΦD1 = ΦD2	▪ Φ3 mm (0.12 in) ▪ Φ6 mm (0.24 in)

It is possible to check the mechanical loading capacity as a function of the installation and process conditions online using the Sizing Thermowell calculation tool in the Endress+Hauser Applicator software. https://portal.endress.com/webapp/applicator

Operability

Operation concept

The configuration of device-specific parameters is done via the HART protocol or CDI interface (= Endress+Hauser Common Data Interface). There are specific configuration or operating programs from different manufacturers available to the user for this purpose. Both the DD (Device Description) files and the DTM (Device Type Manager) files are provided for iTHERM TrustSens thermometers.

Self-calibration

A self-calibration certificate similar to laboratory calibration can be created with a DTM and can be printed on demand. The necessary measurement data is stored in the device and can be requested by the DTM.

Local operation

LED signals

Item	LEDs	Functional description
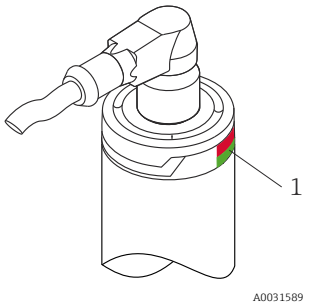 1 *LED for device status indication*	LED green (gn) Lit	Voltage supply is correct. The device is operational and the set limit values are met.
	LED green (gn) is flashing	At a frequency of 1 Hz: self-calibration currently being performed. At a frequency of 5 Hz for 5 s: self-calibration finished and valid, all process criteria were within specifications. Calibration data stored.
	LED red (rd) and green (gn) are flashing alternately	Self-calibration finished but not valid. Violation of the necessary process criteria. Calibration data not stored.
	LED red (rd) is flashing	Diagnostic event present: "Warning"
	LED red (rd) is lit	Diagnostic event present: "Alarm"

Operating elements

To prevent manipulation, no operating elements are present directly on the device. The thermometer is configured only by remote operation.

Remote operation

Configuration

Configuration kits, e.g. Commubox FXA195 or TXU10, for PC-programmable thermometer with setup software and interface for PC with USB port.

HART® functions and device-specific parameters are configured by HART® communication or via the interface of the device. There are special configuration tools like FieldCare or DeviceCare by Endress +Hauser. For more information, contact your Endress+Hauser sales representative.

Operating tools

Operating tool	Sources for obtaining the required device descriptions (DD) or device type manager (DTM)
FieldCare (Endress+Hauser)	▪ www.endress.com → Downloads area → Software ▪ DVD (contact Endress+Hauser)
DeviceCare (Endress+Hauser)	www.endress.com → Downloads area → Software
FieldXpert SFX350, SFX370 (Endress+Hauser)	Use update function of handheld terminal

Certificates and approvals

Current certificates and approvals for the product are available at www.endress.com on the relevant product page:

1. Select the product using the filters and search field.
2. Open the product page.
3. Select **Downloads**.

MTBF

For the transmitter: 327 years, according to Siemens Standard SN29500

Hygiene standard

- EHEDG certification, type EL CLASS I. EHEDG-certified/tested process connections. → 📄 21
- 3-A authorization no. 1144, 3-A Sanitary Standard 74-07. Listed process connections. → 📄 21
- ASME BPE (latest edition), certificate of conformity can be ordered for indicated options
- FDA-compliant
- All surfaces in contact with the medium are free of animal derived ingredients (ADI/TSE) and do not contain any materials derived from bovine or animal sources.

Materials in contact with food/product (FCM)

The process contact parts (FCM) are in conformity with the following European Regulations:
- Regulation (EC) No 1935/2004, on materials and articles intended to come into contact with food, article 3, paragraph 1, article 5 and 17.
- Regulation (EC) No 2023/2006 on good manufacturing practice for materials and articles intended to come into contact with food.
- Regulation (EU) No 10/2011 on plastic materials and articles intended to come into contact with food.

CRN approval

The CRN approval is only available for certain thermowell versions. These versions are identified and displayed accordingly during the configuration of the device.

Detailed ordering information is available for your nearest sales organization www.addresses.endress.com or in the Download Area under www.endress.com :

1. Select the country
2. Select Downloads
3. In the search area: select Approvals/approval type
4. Enter the product code or device
5. Start the search

Surface purity

- Free from oil and grease for O_2 applications, optional
- PWIS-free (PWIS = paint-wetting impairment substances as per DIL0301), optional

Material resistance

Material resistance - including resistance of housing - to the following Ecolab cleaning/disinfection agents:
- P3-topax 66
- P3-topactive 200
- P3-topactive 500
- P3-topactive OKTO
- And demineralized water

Ordering information

Detailed ordering information is available from your nearest sales organization www.addresses.endress.com or in the Product Configurator at www.endress.com:

1. Select the product using the filters and search field.
2. Open the product page.
3. Select **Configuration**.

Application packages

Heartbeat Diagnostics

Available in all device versions.

Function
- Continuous self-monitoring of the device
- Diagnostic messages output to:
  - the local display
  - an asset management system (e.g. FieldCare/DeviceCare)
  - an automation system (e.g. PLC)

Advantages
- Device condition information is available immediately and processed in time.
- The status signals are classified in accordance with VDI/VDE 2650 and NAMUR recommendation NE 107 and contain information about the cause of the error and remedial action.

For detailed information on Heartbeat functions, see the Operating Instructions

Heartbeat Verification

Available in all device versions.

Device functionality checked on demand
- Verification of the correct functioning of the measuring device within specifications
- The verification result provides information about the condition of the device: "Passed" or "Failed"
- The results are documented in a verification report
- The automatically generated report supports the obligation to demonstrate compliance with internal and external regulations, laws and standards
- Verification is possible without interrupting the process

Advantages
- No onsite presence is required to use the function
- The DTM [1] triggers verification in the device and interprets the results. No specific knowledge is required on the part of the user.
- The verification report can be used to prove quality measures to a third party.
- Heartbeat Verification can replace other maintenance tasks (e.g. periodic check) or extend the test intervals.

For detailed information on Heartbeat functions, see the Operating Instructions

Heartbeat Monitoring

Available in all device versions.

1) Device Type Manager: controls device operation via DeviceCare, FieldCare or a DTM-based process control system.

Function
Calibration information is logged in addition to the verification parameters. 350 calibration points are saved in the device (FIFO memory).

Advantages
- Early detection of changes (trends) to ensure plant availability and product quality.
- Use of information for the proactive planning of measures (e.g. maintenance).

For detailed information on Heartbeat functions, see the Operating Instructions

Accessories

The accessories currently available for the product can be selected at www.endress.com:

1. Select the product using the filters and search field.
2. Open the product page.
3. Select **Spare parts & Accessories**.

Device-specific accessories

Device-specific accessories

Accessory	Description
Welding boss with sealing taper (metal - metal) 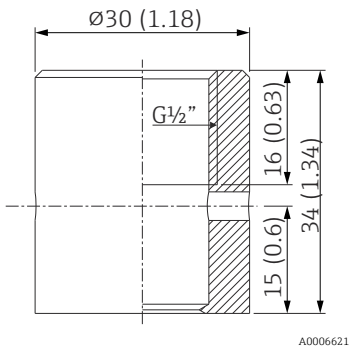 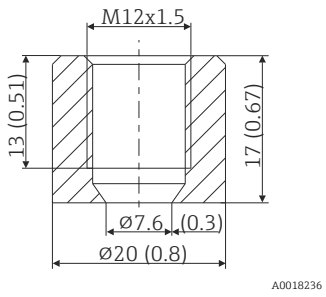 	Welding boss for G½" and M12x1.5 thread Metal-sealing; conical Material of wetted parts: 316L/1.4435 Max. process pressure 16 bar (232 PSI) **Order number:** - 71424800 (G½") - 71405560 (M12x1.5)
Dummy plug 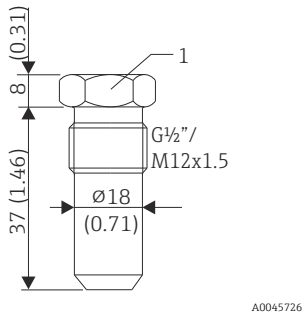 *1 Size across flats AF22*	Dummy plug for G½” or M12x1.5 conical metal-sealing welding boss Material: SS 316L/1.4435 **Order number:** - 60022519 (G½") - 60021194 (M12x1.5)

Weld-in adapter for Ingold process connection (OD 25 mm (0.98 in) x 50 mm (1.97 in) 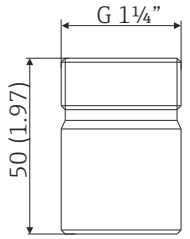 	Material of wetted parts: 316L/1.4435 Weight: 0.32 kg (0.7 lb) Order numbers: ▪ 71531585 – with 3.1 material certificate ▪ 71531588 O-ring seal set ▪ Silicone O-ring in accordance with FDA CFR 21 ▪ Maximum temperature: 230 °C (446 °F) ▪ **Order number:** 60018911
Flexible handle cap to cover the iTHERM QuickNeck bottom part 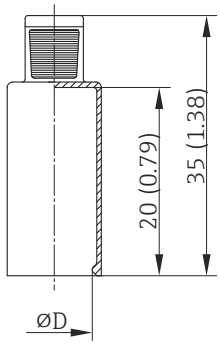 	Diameter ØD: 24 to 26 mm (0.94 to 1.02 in) Material: Thermoplastic polyolefin - elastomer (TPE), free from plasticizers Maximum temperature: +150 °C (+302 °F) **Order number:** 71275424
M12x1 cable set, angle plug 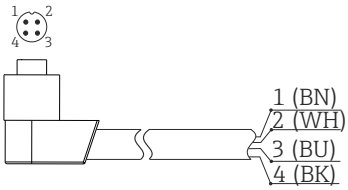 	PVC cable, 4 x 0.34 mm² (22 AWG) with M12x1 coupling; angle plug; screw plug; length 5 m (16.4 ft); IP69K Order number: 71589963 Wire colors: ▪ 1 = BN brown (+) ▪ 2 = WH white (nc) ▪ 3 = BU blue (-) ▪ 4 = BK black (nc)
M12x1 cable set, straight 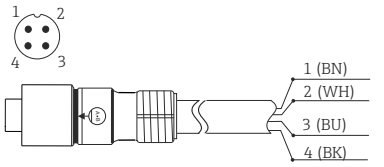 	PVC cable, 4 x 0.34 mm² (22 AWG) with M12x1 coupling nut made of epoxy coated zinc; straight female connector type; screw plug; length 5 m (16.4 ft); IP69K Order number: 71217708 Wire colors: ▪ 1 = BN brown (+) ▪ 2 = WH white (nc) ▪ 3 = BU blue (-) ▪ 4 = BK black (nc)

Weld-in adapter

For detailed information about the order code and hygienic compliance of the adapters and spare parts, see the Technical Information (TI00426F).

Weld-in adapter	Material	Roughness µm (µin) process side
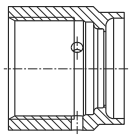 **G ¾, d=29 pipe-mounting**	316L (1.4435)	≤1.5 (59.1)

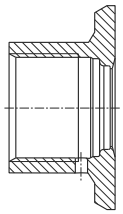 A0008251 **G ¾, d=50 vessel-mounting**	316L (1.4435)	≤0.8 (31.5)
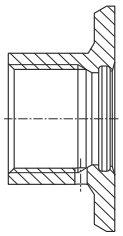 A0008256 **G ¾", d=55, with flange**	316L (1.4435)	≤0.8 (31.5)
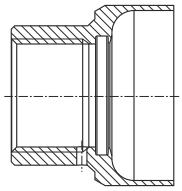 A0011924 **G 1", d=53, without flange**	316L (1.4435)	≤0.8 (31.5)
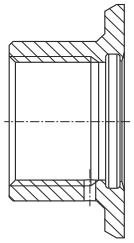 A0008248 **G 1", d=60, with flange**	316L (1.4435)	≤0.8 (31.5)
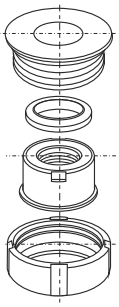 A0008253 **G 1" adjustable**	316L (1.4435)	≤0.8 (31.5)

Maximum process pressure for the weld-in adapters:
- 25 bar (362 PSI) at maximum 150 °C (302 °F)
- 40 bar (580 PSI) at maximum 100 °C (212 °F)

Service-specific accessories

Modems/Edge devices

Commubox FXA195 USB/HART modem
Connects intrinsically safe 'smart transmitters' with a HART protocol to the USB interface of a laptop/PC. This enables the remote operation of the transmitters with FieldCare.

Technical Information TI00404F
www.endress.com/fxa195

Software

DeviceCare SFE100
DeviceCare is an Endress+Hauser configuration tool for field devices using the following communication protocols: HART, PROFIBUS DP/PA, FOUNDATION Fieldbus, IO/Link, Modbus, CDI and Endress+Hauser Common Data Interfaces.

Technical Information TI01134S
www.endress.com/sfe100

FieldCare SFE500
FieldCare is a configuration tool for Endress+Hauser and third-party field devices based on DTM technology.
The following communication protocols are supported: HART, WirelessHART, PROFIBUS, FOUNDATION Fieldbus, Modbus, IO-Link, EtherNet/IP, PROFINET and PROFINET APL.

Technical Information TI00028S
www.endress.com/sfe500

Netilion
With the Netilion IIoT ecosystem, Endress+Hauser enables the optimization of plant performance, digitization of workflows, sharing of knowledge and improved collaboration. Drawing upon decades of experience in process automation, Endress+Hauser offers the process industry an IIoT ecosystem designed to effortlessly extract insights from data. These insights allow process optimization, leading to increased plant availability, efficiency, reliability and ultimately a more profitable plant.

www.netilion.endress.com

Field Xpert SMT50
Universal, high-performance tablet PC for device configuration.

Technical Information TI01555S
www.endress.com/smt50

Field Xpert SMT77 via WLAN
Universal, high-performance tablet PC for device configuration in Ex Zone 1 areas.

Technical Information TI01418S
www.endress.com/smt77

SmartBlue app
SmartBlue from Endress+Hauser allows easy wireless field device configuration via Bluetooth® or WLAN. By providing mobile access to diagnostic and process information, SmartBlue saves time, even in hazardous and difficult-to-access environments.

ANDROID APP ON Google Play
Download on the App Store

A0033202

11 QR code for free Endress+Hauser SmartBlue app

Communication-specific accessories

Field Data Manager (FDM) analysis software MS20, MS21

- Field Data Manager (FDM) is a software which provides central data management and visualization. This enables the continuous, tamper-free archiving of process data, e.g. measured values and diagnostic events. "Live data" from connected devices is available. FDM saves the data in an SQL database.
- Supported databases: PostgreSQL (included in the delivery), Oracle or Microsoft SQL server.
- MS20 single-user license: Installing the software on a computer.
- MS21 multi-user license: Several simultaneous users, dependent on the number of available licenses.

Technical Information TI01022R

www.endress.com/ms20

www.endress.com/ms21

OPC DA server RXO20

The OPC DA server transmits process data such as instantaneous values or totalizers from connected Endress+Hauser field devices and provides them to the OPC clients in real time. These data can be visualized with OPC client software. Communication takes place via an RS232/RS485 interface or a TCP/IP connection. OPC is used in systems of various sizes in factory and process automation.

Technical Information TI00122R

www.endress.com/rxo20

Configuration kit TXU10

Configuration kit for PC-programmable transmitter - FDT/DTM-based plant asset management tool, FieldCare/DeviceCare, and interface cable (4-pin connector) for PC with USB port.

For more information, please refer to: www.endress.com

Online tools

Product information about the entire life cycle of the device is available at:
www.endress.com/onlinetools

System components

Data Manager of the RSG product family

Data Managers are flexible and powerful systems to organize process values. Up to 20 universal inputs and up to 14 digital inputs for direct connection of sensors, optionally with HART, are available as an option. The measured process values are clearly presented on the display and logged safely, monitored for limit values and analyzed. The values can be forwarded via common communication protocols to higher-level systems and connected to one another via individual plant modules.

For more information, please refer to: www.endress.com

Process indicators from the RIA product family

Easily readable process indicators with various functions: loop-powered indicators for displaying 4-20 mA values, display of up to four HART variables, process indicators with control units, limit value monitoring, sensor power supply, and galvanic isolation.

Universal application thanks to international hazardous area approvals, suitable for panel mounting or field installation..

For more information, please refer to: www.endress.com

RN series active barrier

Single- or two-channel active barrier for safe separation of 0/4 to -20 mA standard signal circuits with bidirectional HART transmission. In the signal duplicator option, the input signal is transmitted to two galvanically isolated outputs. The device has one active and one passive current input; the outputs can be operated actively or passively.

For more information, please refer to: www.endress.com

Documentation

The following document types are available in the Downloads area of the Endress+Hauser website (www.endress.com/downloads), depending on the product configuration:

Document type	Purpose and content of the document
Technical Information (TI)	**Planning aid** This document contains all the technical data on the product and provides an overview of everything that can be ordered with the product.
Brief Operating Instructions (KA)	**Quick guide to obtaining the first measured value** The Operating Instructions contain all the essential information about the product from incoming acceptance to initial commissioning.
Operating Instructions (BA)	**Reference** The Operating Instructions contain the information that is required in the various phases of the life cycle of the product: From product identification, incoming acceptance and storage, to mounting, connection, operation and commissioning through to troubleshooting, maintenance and disposal.
Description of Device Parameters (GP)	**Reference for parameters** The document contains detailed explanations of readable or configurable parameters in the product. The description is aimed at those who work with the product over its entire life cycle and perform specific configurations.
Safety Instructions (XA)	Safety Instructions for electrical equipment in hazardous areas are supplied with the product depending on the approval. These are an integral part of the Operating Instructions. The nameplate indicates the Safety Instructions (XA) that are relevant to the product.
Supplementary device-dependent documentation (SD/FY)	Always comply strictly with the instructions in the relevant supplementary documentation. The supplementary documentation is an integral part of the product documentation.

LENNTECH
WATER TREATMENT SOLUTIONS
info@lenntech.com Tel. +31-152-610-900
www.lenntech.com Fax. +31-152-616-289

Endress+Hauser
People for Process Automation