TI00105R/09/EN/17.25-00
71758959
2025-12-29

Technical Information
Thermophant T TTR31, Thermophant T TTR35

Metric, compact RTD thermometer with switch output for industrial and hygienic applications

Field of application

Temperature switch for the monitoring, display and control of process temperatures in a range from −50 to 150 °C (−58 to 302 °F), optionally for Thermophant T TTR35 with extension neck: −50 to 200 °C (−58 to 392 °F):

- Thermophant T TTR31 - with thread connections or coupling
- Thermophant T TTR35 - for hygienic applications

Electronic versions:
- one PNP switch output
- two PNP switch outputs
- 2x PNP switch outputs or one PNP switch output and 4 to 20 mA output (active)

Benefits

- Integrated switching electronics for decentralized and economic process monitoring and control
- Function control and information on site thanks to LEDs and digital display
- 3-A mark
- Long-term stable temperature sensor made of platinum (Pt100, class A as per IEC 60751)
- High accuracy over the entire ambient temperature range and short response time
- Operation and visualization also with PC and FieldCare or ReadWin 2000 configuration software
- DESINA-compliant

Endress+Hauser
People for Process Automation

Table of contents

Function and system design 3
Measuring principle 3
Measuring system 3

Input 4
Measured variable 4
Measuring range 4

Output 4
Output signal 4
Signal on alarm 4
Load 4
Range of adjustment 5
Switching capacity 5
Inductive load 5

Power supply 5
Electrical connection 5
Supply voltage 6
Current consumption 6

Performance characteristics 6
Reference operating conditions 7
Measurement error 7
Switch point non-reproducibility 7
Long-term drift 7
Sensor response time 7
Long-term reliability 7
Influence of ambient temperature 7
Switch output response time 7
Analog output 7

Installation 7
Orientation 7
Installation instructions 8

Environment 9
Ambient temperature 9
Storage temperature 9
Operating altitude 9
Degree of protection 10
Shock resistance 10
Vibration resistance 10
Electromagnetic compatibility (EMC) 10
Electrical safety 10

Process 10
Process temperature range 10
Process pressure range 10

Mechanical construction 13
Design and dimensions 13
Process connections 13
Weight 15
Materials 15
Surface roughness 15

Operability 16
Operation concept 16
Local display 16
Remote operation 17

Certificates and approvals 18
Hygiene standard 18
Materials in contact with food/product (FCM) 19

Ordering information 19

Accessories 20
Device-specific accessories 20
Communication-specific accessories 21
System components 23

Documentation 23

Function and system design

Measuring principle

Electronic recording and conversion of input signals in industrial temperature measurement. A platinum sensor located at the measuring tip changes its resistance value depending on the temperature. This resistance value is recorded electronically. The relationship between resistance and temperature is defined in the international standard IEC 60751.

Measuring system

Overview

Product line	Thermophant T TTR31	Thermophant T TTR35
	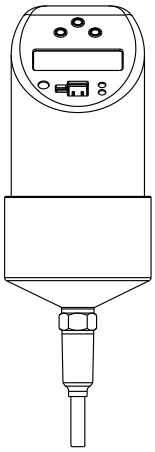 A0005276	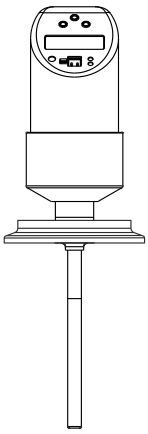 A0023194
Sensor	Pt100 RTD	Pt100 RTD
Field of application	Measurement, monitoring and control of process temperatures in industrial processes.	Measurement, monitoring and control of process temperatures in hygienic processes.

Process connection	Industry:
	▪ Compression fitting (sensor length ≥100 mm (3.94 in))
	▪ Thread:
	  ▪ G½" and G¼"
	  ▪ ANSI NPT¼" and NPT½"
		Hygiene:
		▪ Conical metal-metal G½"
		▪ Clamp 1" - 1½", 2", DIN 32676, DN25 to 40 Form B [1)]
		▪ Clamp 2", DIN 32676, DN50, Form B [1)]
		▪ Varivent F, N
		▪ DIN 11851
		▪ APV Inline

Measuring range	−50 to 150 °C (−58 to 302 °F) With extension neck: −50 to 200 °C (−58 to 392 °F)	−50 to 150 °C (−58 to 302 °F) With extension neck: −50 to 200 °C (−58 to 392 °F)

1) DIN 32676 replaces ISO 2852.

DC voltage version (DC)

PNP switch output of electronics.

Power supply with a power supply unit.

Preferably in connection with programmable logic controllers (PLC) or for controlling a relay.

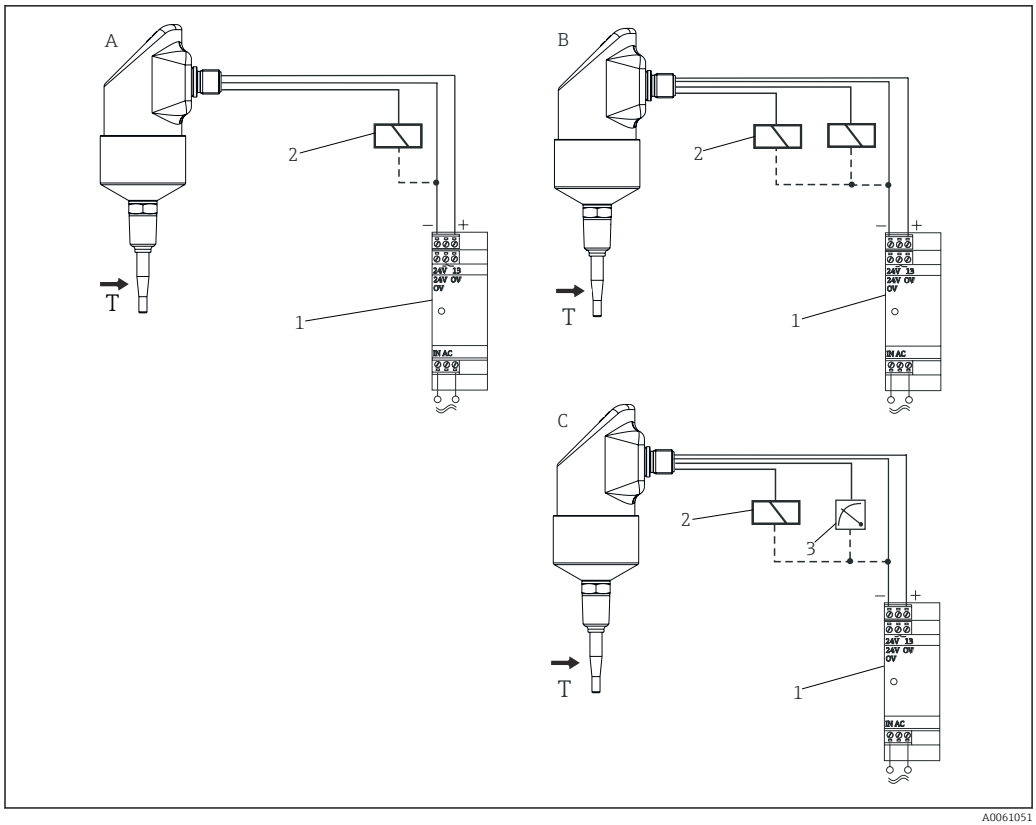

1 DC voltage version (DC)

A 1x PNP switch output
B 2x PNP switch output
C PNP switch output with additional analog output 4 to 20 mA (active)
1 Supply unit
2 Load (programmable logic controller, process control system or relay)
3 Process indicator or data manager (at 4 to 20 mA analog output)

Input

Measured variable

Temperature (temperature-linear transmission behavior)

Measuring range

Designation	Measuring range limits	Min. measuring span
Pt100 as per IEC 60751	−50 to 150 °C (−58 to 302 °F) −50 to 200 °C (−58 to 392 °F) with extension neck	20 K (36 °F)
Sensor current: ≤0.6 mA		

Output

Output signal

DC voltage version (short-circuit proof version):
- 1x PNP switch output
- 2x PNP switch outputs
- PNP switch output and 4 to 20 mA output, active

Signal on alarm

- Analog output: ≤3.6 mA or ≥21.0 mA (if setting is ≥21.0 mA, output is ≥21.5 mA)
- Switch outputs: in safe state (switch open)

Load

Max. ($V_{power\ supply}$ - 6.5 V) / 0.022 A (current output)

Range of adjustment

Switch output	Switch point (SP) and switchback point (RSP) in 0.1 K increments. Minimum difference between SP and RSP: 0.5 °C (0.8 °F)
Analog output (if available)	Lower range value (LRV) and upper range value (URV) can be configured as required within the sensor range. Min. measuring span 20 K (36 °F)
Damping	Can be configured as required: 0 to 40 s in increments of 0.1 s
Unit	°C, °F, K

Switching capacity

DC voltage version:

Switch status ON	Ia ≤ 250 mA
Switch status OFF	Ia ≤ 1 mA
Switching cycles	> 10,000,000
Voltage drop PNP	≤ 2 V
Overload protection	Switching current checked automatically: switched off in the event of overcurrent. Switching current checked again every 0.5 s. Max. capacitive load: 14 µF at max. supply voltage (without resistive load). Periodic disconnection from a protective circuit in event of overcurrent (f = 2 Hz) and "Warning" displayed.

Inductive load

To prevent electrical interference, only operate an inductive load (relays, contactors, solenoid valves) with a direct protective circuit (free-wheeling diode or capacitor).

Power supply

Electrical connection

Plug connector

Hygiene version: According to the 3-A Sanitary Standard and EHEDG, electrical connecting cables must be smooth, corrosion-resistant and easy to clean.

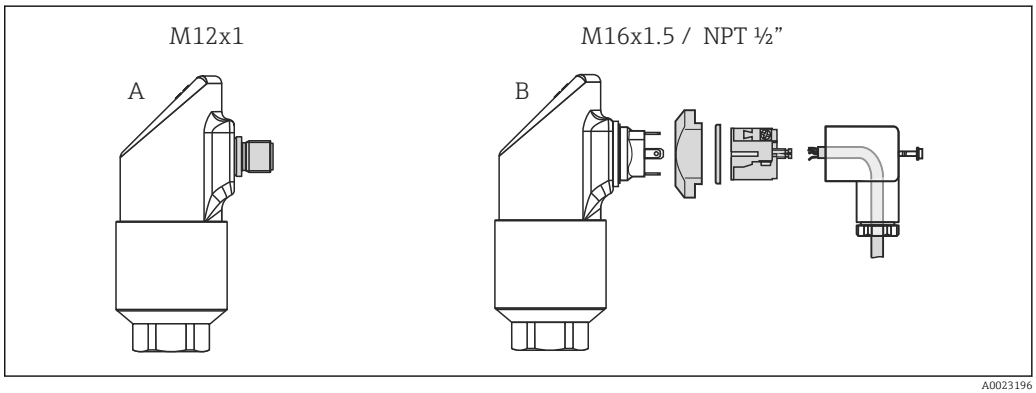

A0023196

A M12x1 connector
B Valve connector M16x1.5 or NPT ½"

Device connection

DC voltage version with M12x1 connector

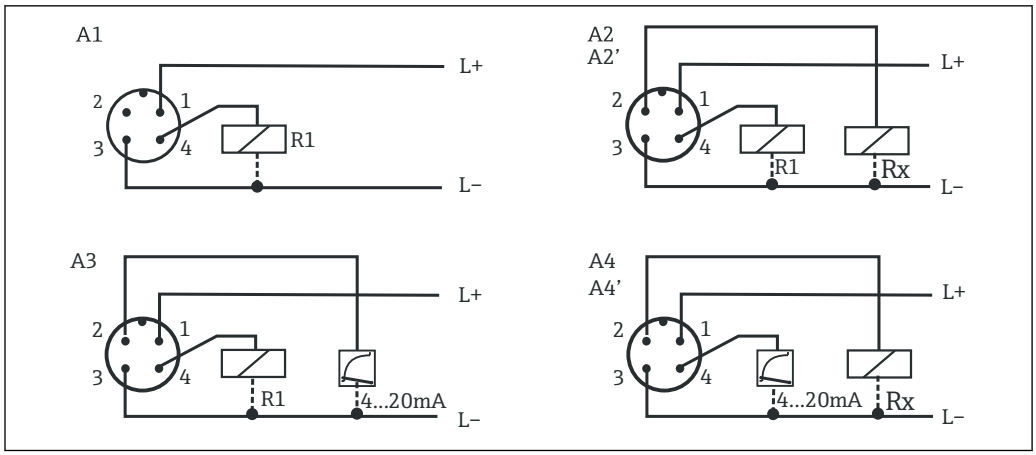

2 Thermophant T TTR3x with M12x1 connector

A1 1x PNP switch output
A2 2x PNP switch output R1 and Rx (R2)
A2' 2x PNP switch output R1 and Rx (diagnostics/NC contact with "DESINA" setting)
A3 1x PNP switch output and 1x analog output (4 to 20 mA)
A4 1x analog output (4 to 20 mA) and 1x PNP switch output Rx (R2)
A4' 1x analog output (4 to 20 mA) and 1x PNP switch output Rx (diagnostics/NC contact with "DESINA" setting)

DC voltage version with M16x1.5 valve connector or NPT ½"

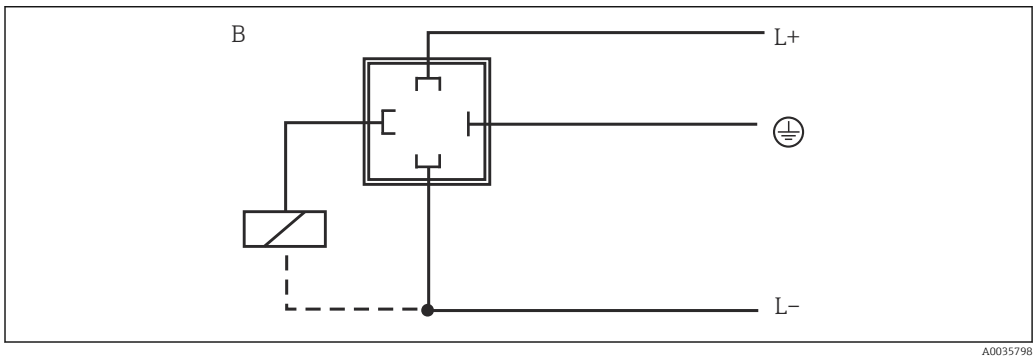

B 1x PNP switch output

Supply voltage

The device may be powered only by a power supply unit that operates using a limited energy circuit in accordance with UL/EN/IEC 61010-1, Section 9.4 and the requirements in Table 18.

DC voltage version: 12 to 30 V_{DC} (reverse polarity protection)

Behavior in case of overvoltage (> 30 V)
- The device works continuously up to 34 V_{DC} without any damage
- No damage in the event of transient overvoltage up to 1 kV (according to EN 61000-4-5)
- If the supply voltage is exceeded, the specified characteristics are no longer guaranteed

Behavior in the event of undervoltage
If the supply voltage falls below the minimum value, the device switches to a defined off state (condition as without supply voltage = switch open).

Current consumption

Without load <60 mA with reverse polarity protection.

Performance characteristics

The percentages in the "Performance characteristics" section refer to the nominal value of the sensor.

Reference operating conditions

As per DIN IEC 60770, DIN IEC 61003
T = 25 °C (77 °F)
- Relative humidity 45 to 75%
- Atmospheric pressure 860 to 1060 kPa (124 to 153 psi), using water as the test medium
- Supply voltage U = 24 V_{DC}

Measurement error

Electronics

0.2 K

Sensor
- Tolerance class A as per IEC 60751, −50 to 200 °C (−58 to 392 °F)
- Maximum measurement error in °C = ± 0.15 + 0.002 · |T|

|T| = Process temperature in °C without taking the sign into account.

Total error

Total error = electronics error + sensor error, for process temperatures:

- −50 to 75 °C (−58 to 167 °F) ≤ 0.5 K
- 75 to 200 °C (167 to 392 °F) ≤ 0.75 K

Switch point non-reproducibility

0.1 K as per EN 61298-2 (without ambient temperature effect)

Long-term drift

≤ 0.1 K (0.18 °F) per year under reference conditions

Sensor response time

Measured in accordance with IEC 60751 with 0.4 m/s (1.3 ft/s) in flowing water100 ms

t_{50}	t_{90}
< 1.0 s	< 2.0 s

Long-term reliability

Mean time between failure (MTBF) > 100 years

(calculated according to the "British Telecom Handbook of Reliability Data No. 5")

Influence of ambient temperature
- Switch output and display: ≤ 30 ppm/K
- Analog output: ≤ 50 ppm/K + influence of switch output and display

Switch output response time

100 ms

Analog output

Measurement error	Switch point and display deviation +0.1%
Rise time t_{90}	≤200 ms
Settling time t_{99}	≤500 ms

Installation

Orientation

Ensure self-draining in the process. If there is an opening to detect leaks at the process connection, this opening must be at the lowest possible point.

The top housing section can be rotated 310°.

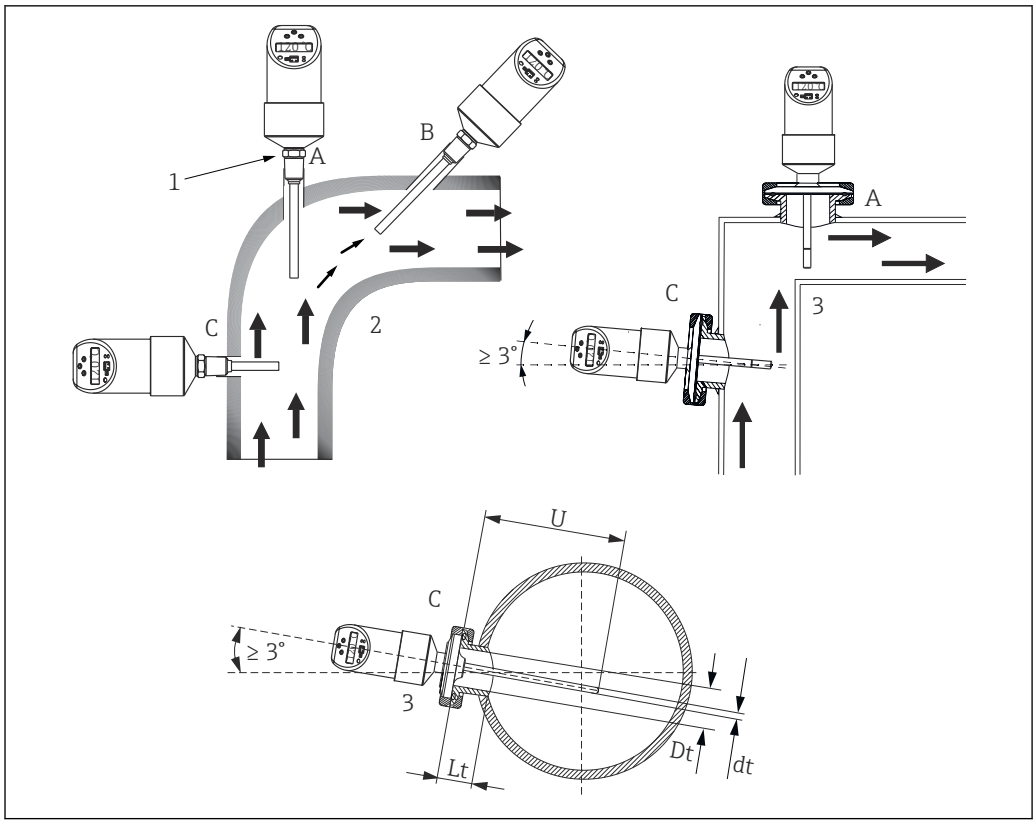

3 Options for installation in pipes

1 Hexagonal screw of process connection
2 Thermophant T TTR31 for use in industrial processes
3 Thermophant T TTR35 for use in hygienic processes

Installation instructions

Hygiene-compliant installation

CAUTION

In the event of a defective sealing ring (O-ring) or seal, perform the following steps:

- Remove the device.
- Clean the thread and the O-ring joint/sealing surface.
- Replace the sealing ring and the seal.
- Perform process cleaning after installation.

Ensure compliance with the requirements of the EHEDG and the 3-A Sanitary Standard.

Installation instruction EHEDG/cleanability: $Lt \leq (Dt-dt)$

Installation instruction 3-A/cleanability: $Lt \leq 2(Dt-dt)$

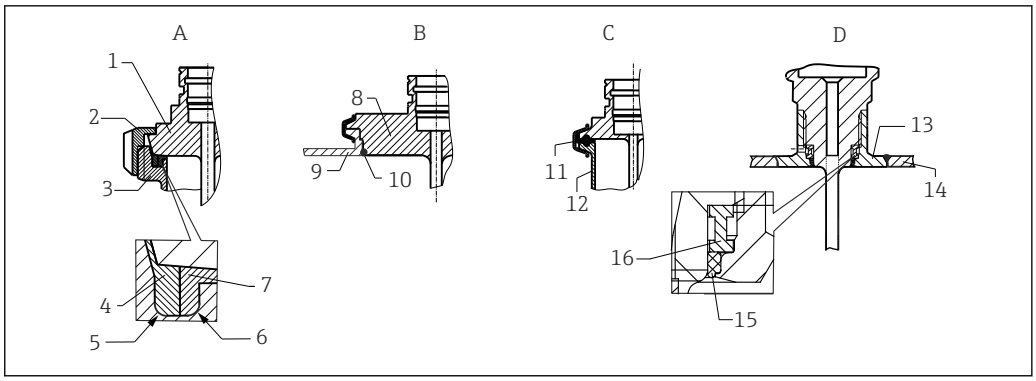

4 Detailed installation instructions for hygiene-compliant installation

A Dairy fitting according to DIN 11851, only in conjunction with EHEDG-certified and self-centering sealing ring
1 Sensor with dairy fitting
2 Groove slip-on nut
3 Counterpart connection
4 Centering ring
5 R0.4
6 R0.4
7 Sealing ring
B Varivent® process connection for VARINLINE® housing
8 Sensor with Varivent connection
9 Counterpart connection
10 O-ring
C Clamp according to DIN 32676, DN25-40
11 Molded seal
12 Counterpart connection
D Liquiphant M G1" process connection, horizontal installation
13 Weld-in adapter
14 Vessel wall
15 O-ring
16 Thrust collar

For welded connections, perform welding work on the process side as follows:

1. Ensure the surface is honed and mechanically polished, Ra ≤0.76 µm (30 µin).
2. Use suitable welding material.
3. Avoid crevices, folds and gaps.
4. Flush-weld or weld with welding radius ≥3.2 mm (0.13 in).

Welding work has been carried out properly.

To maintain cleanability, observe the following when installing the thermometer:

1. The installed sensor is suitable for CIP (cleaning in place). Cleaning is carried out in combination with piping or tank. For tank installation, use process connection nozzles to ensure the cleaning assembly directly sprays this area to clean it effectively.
2. The Varivent® connections enable flush-mounted installation.

Cleanability is retained after installation.

Environment

Ambient temperature	−40 to 85 °C (−40 to 185 °F)
Storage temperature	−40 to 85 °C (−40 to 185 °F)
Operating altitude	Up to 4 000 m (13 123.36 ft) above sea level

Degree of protection

IP65	M16 x 1.5 or NPT ½", valve connector
IP66	M12 x 1 connector

Shock resistance

50 g as per DIN IEC 68-2-27 (11 ms)

Vibration resistance

- 20 g as per DIN IEC 68-2-6 (10-2000 Hz)
- 4 g as per marine approval

Electromagnetic compatibility (EMC)

CE compliance

Electromagnetic compatibility in accordance with all the relevant requirements of the IEC/EN 61326 series and NAMUR Recommendation EMC (NE21). For details refer to the EU Declaration of Conformity.

Maximum measurement error <1% of measuring range.

Interference immunity according to IEC/EN 61326 series, industrial requirements.

Interference emission as per IEC/EN 61326 series, Class B equipment.

Electrical safety

- Protection class III
- Overvoltage category II
- Pollution level 2

Process

Process temperature range

−50 to 150 °C (−58 to 302 °F)

Device version with extension neck: −50 to 200 °C (−58 to 392 °F).

Restrictions depending on process connection and ambient temperature:
- With compression fitting: no restrictions
- With process connection:

Max. ambient temperature	Max. process temperature
25 °C (77 °F)	No restrictions
40 °C (104 °F)	135 °C (275 °F)
60 °C (140 °F)	120 °C (248 °F)
85 °C (185 °F)	100 °C (212 °F)

Process pressure range

Maximum permitted process pressure depending on the insertion length

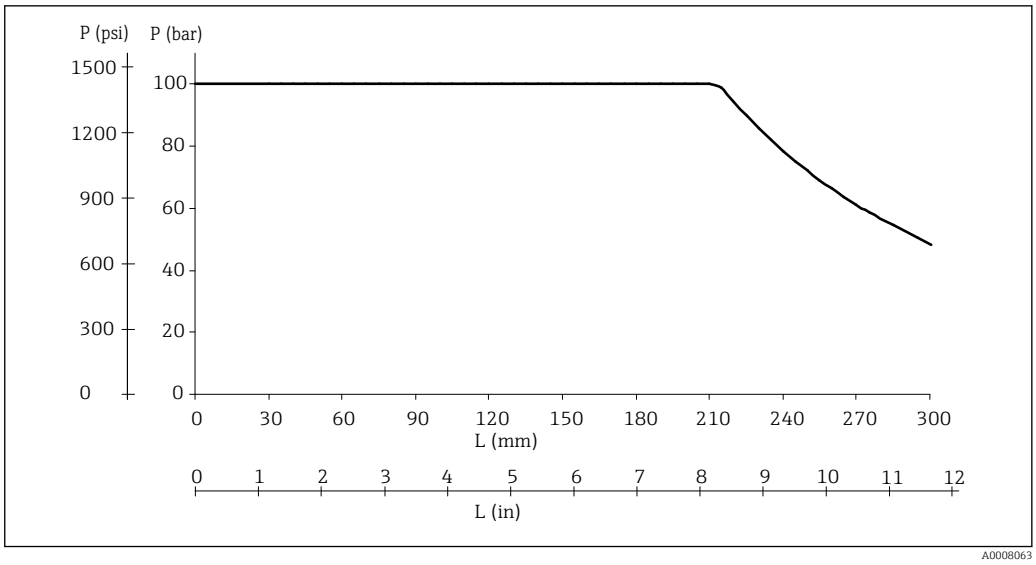

5 Maximum permitted process pressure

L Insertion length
p Process pressure

The diagram takes into consideration not only the overpressure but also the compressive load caused by flow, wherein a safety factor of 1.9 has been applied for operation with flow. Due to the increased bending stress caused by flow, the maximum permitted static operating pressure is lower in the case of longer insertion lengths.

This calculation is based on the maximum permitted flow velocity for the relevant insertion length (see diagram below).

The maximum process pressure for the conical metal-metal process connection for hygienic processes (MB option) for the device is 1.6 MPa = 16 bar (232 psi).

Permitted flow velocity depending on the insertion length

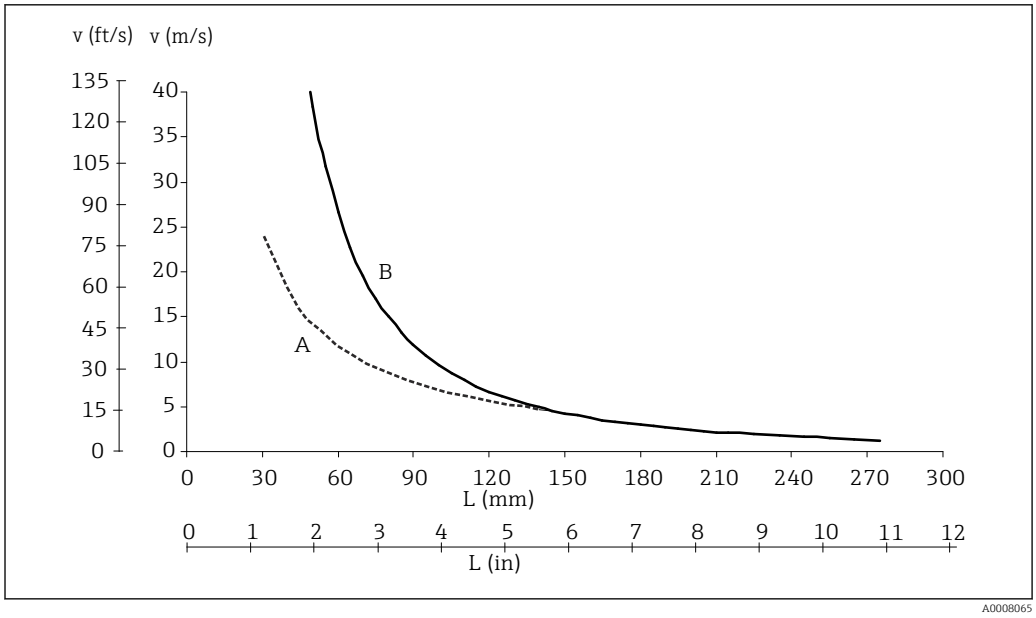

6 Permitted flow velocity

A Water
B Air
L Insertion length, during flow
v Flow velocity

The permitted flow velocity is the minimum from the resonance velocity (resonance distance 80%) and the load or buckling caused by flow, which would result in the failure of the thermometer tube or the undershooting of the safety factor (1.9). The calculation was performed for the specified limit operating conditions of 200 °C (392 °F) and ≤100 bar (1 450 psi) process pressure.

Mechanical construction

Design and dimensions

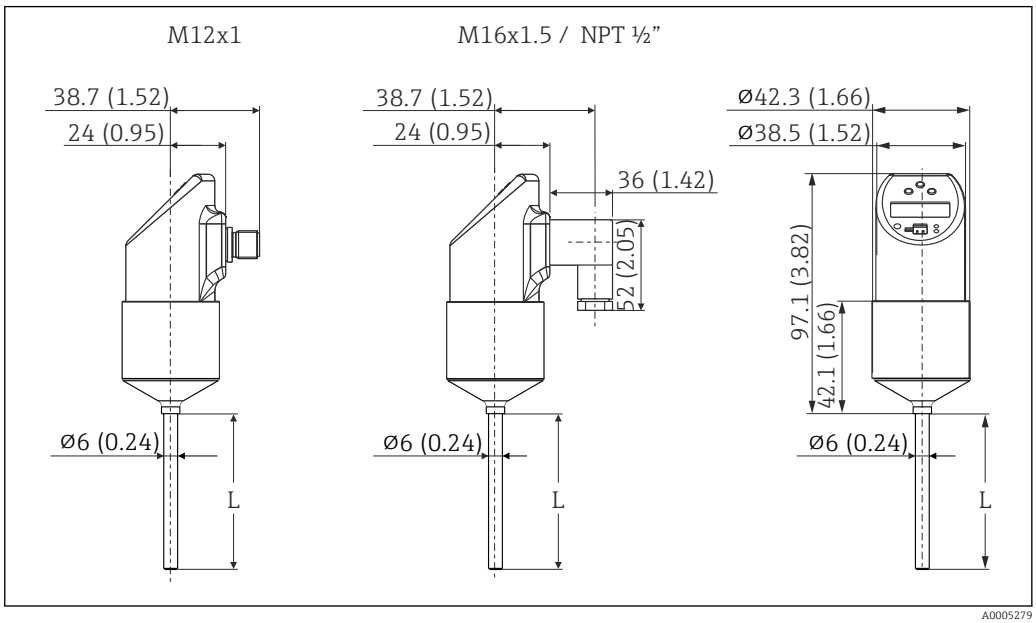

7 All dimensions in mm (in)

L: Insertion length
Left: M12x1 connector as per IEC 60947-5-2
Center: Valve connector M16x1.5 or NPT ½" as per DIN 43650A/ISO 4400

Process connections

The following process connections can be configured for the industrial version of the device.

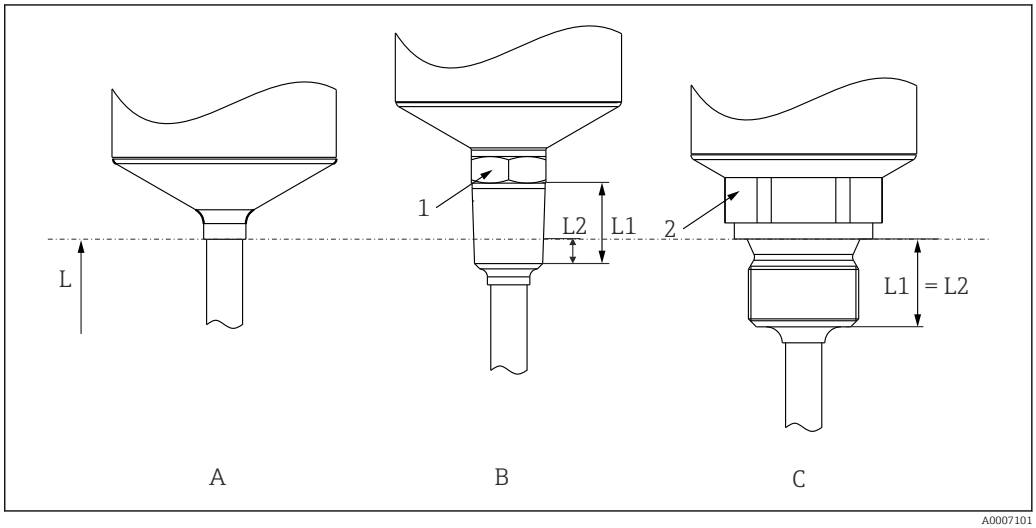

8 Process connection versions

1 Threaded process connection
2 Threaded process connection, inches, cylindrical as per ISO 228
L Insertion length
L_1 Thread length
L2 Screw-in length

Item no.	Process connection versions	Thread length L_1	Screw-in length L_2
A	Without process connection. Use of suitable welding bosses and compression fittings.	-	-
B	Threaded process connection: ▪ ANSI NPT ¼" (1 = AF14) ▪ ANSI NPT ½" (1 = AF27)	▪ 14.3 mm (0.56 in) ▪ 19 mm (0.75 in)	▪ 5.8 mm (0.23 in) ▪ 8.1 mm (0.32 in)
C	Threaded process connection, inches, cylindrical as per ISO 228: ▪ G¼" (2 = AF14) ▪ G½" (2 = AF27)	▪ 12 mm (0.47 in) ▪ 14 mm (0.55 in)	-

The following process connections can be configured for the hygienic device version.

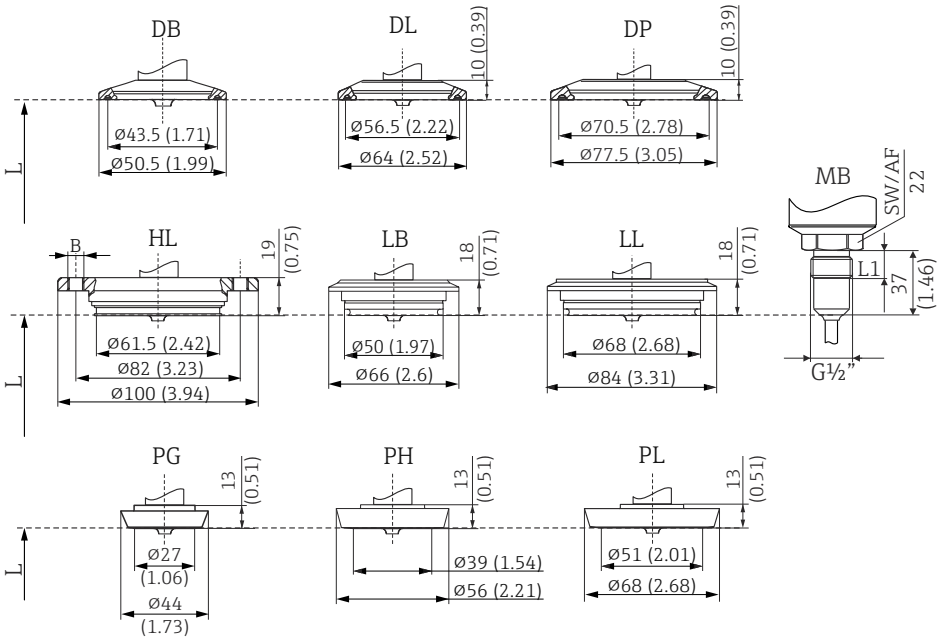

A0023235

9 Process connection versions, all dimensions in mm (in).

L Insertion length L

Item no.	Process connection versions, hygiene version	Hygiene standard
DB	Clamp 1" - 1½", DN, 25 to 40DIN 32676DIN [1].	3-A marked and EHEDG certified (combined with Combifit seal).
DL	Clamp 2", DN50, DIN 32676 [1]	
DP	Clamp 2½", ISO 2852	
HL	APV Inline, DN50, PN40, 316L, B = bores 6 x Ø8.6 mm (0.34 in) + 2 x M8 thread	3-A marked and EHEDG certified
LB	Varivent [2] F DN25-32, PN 40	
LL	Varivent® [2] N DN40-162, PN 40	
MB	Metal sealing system for hygienic processes, G½" thread, thread length L1 = 14 mm (0.55 in). Suitable welding boss available as an accessory.	-
PG	DIN 11851, DN25, PN40 (including coupling nut)	3-A marked and EHEDG certified (only in combination with self-centering seal according to EHEDG position paper)

Item no.	Process connection versions, hygiene version	Hygiene standard
PH	DIN 11851, DN40, PN40 (including coupling nut)	
PL	DIN 11851, DN50, PN40 (including coupling nut)	

1) 32676 replaces ISO 2852
2) Varivent® process connections are suitable for installation in VARINLINE® housing connection flanges.

Weight

300 g (10.58 oz), depends on process connection and sensor length.

Materials

Process connection AISI 316L
- Surfaces in contact with the process in hygienic version
- Coupling nut AISI 304
- Housing AISI 316L
  O-ring between housing and sensor module: EPDM

Electrical connection
- M12 connector, exterior AISI 316L, interior polyamide (PA)
- Valve connector, polyamide (PA)
- M12 connector, exterior 316L
- Cable sheath polyurethane (PUR)
- O-ring between electrical connection and housing: FKM
- Display, polycarbonate PC-FR (Lexan®)
- Seal between display and housing: SEBS THERMOPLAST K®
- Keys: polycarbonate PC-FR (Lexan®)

Surface roughness

R_a ≤0.76 µm (30 µin)

Operability

Operation concept

The device is operated via three keys. The digital display and the light emitting diodes (LED) assist navigation through the operating menu.

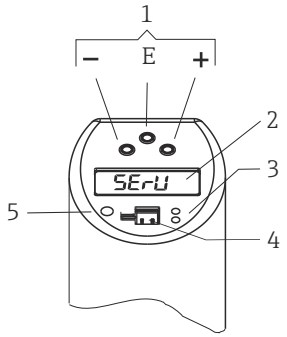

A0044663

10 Position of the operating elements and possibilities for display

1 *Operating keys*
2 *Digital display: illuminated white (= ok); red (= alarm/error)*
3 *Yellow LED for switching states: LED on = switch closed; LED off = switch open*
4 *Communication jack for PC configuration*
5 *LED for status display: green = OK; red = error/fault; flashing red/green = warning*

Local display

Menu-guided operation using operating keys.

The local display can be rotated electronically by 180 °.

Function group	Operation options
BASE (basic functions)	Selection of unit: °C, °F, K
	Zero point, offset (automatic and manual)
	Damping display value, output signal: from 0 to 40 s (in 0.1 s increments), as required
	Display: ▪ Display measured value or set switch point ▪ Rotate display by 180° ▪ Switch off display
	Behavior in accordance with DESINA (with 2 outputs only): The PIN assignment of the M12 connector is in accordance with DESINA guidelines (DESINA = distributed and standardized installation technology for machine tools and manufacturing systems)
OUT (configuration of 1st output) and OUT2 (configuration of 2nd output, only for corresponding electronics version)	Switch output function: ▪ Hysteresis or window function ▪ NC contact or NO contact (see the following diagram) ▪ Analog output 4 to 20 mA
	Switch point: ▪ Input value ▪ Accept present value Switch point from 0.5 to 100% upper range limit (in 0.1 % increments), as required
	Switchback point: ▪ Input value ▪ Accept present value Switchback point from 0.5 to 99.5% upper range limit (in 0.1 % increments), as required

Function group	Operation options
	Switch output delay: can be configured as required from 0 to 99 s (in 0.1 s increments)
4-20 (configuration of analog output, only for corresponding electronic version)	Lower range value (LRV) and upper range value (URV) of analog output: ▪ Input value ▪ Accept present value
	Setting of failure current: choice of ≤3.6 mA / ≥21 mA / last current value
SERV (service functions)	Reset all settings to factory setting
	Preset locking code
	Locking
	Static revision counter (configuration counter), incremented each time the configuration is changed
	Display of last fault to occur
	Simulation of switch output 1, switch output 2 and analog output
	Display of max. measured temperature value
	Display of min. measured temperature value

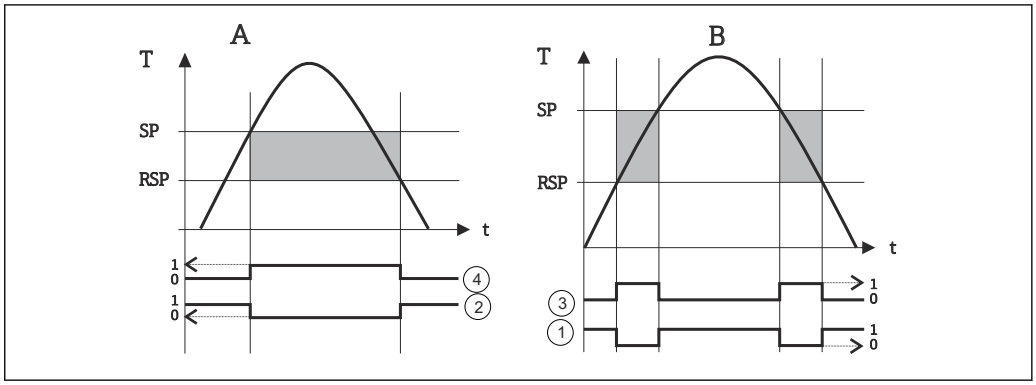

A0061050

A Hysteresis function
B Window function
1 Window - NC contact
2 Hysteresis - NC contact
3 Window - NO contact
4 Hysteresis - NO contact
SP Switch point
RSP Switchback point

Switch point functions

- Hysteresis function:
  The hysteresis function enables two-point control via a hysteresis. Depending on the temperature, the hysteresis can be set via the switch point SP and the switchback point RSP
- Window function:
  The window function allows a process window to be defined
- NO contact or NC contact:
  This switch function can be selected as required
- Delay times for switch point SP and switchback point RSP can be configured in increments of 1 s. This makes it possible to filter out undesired temperature peaks of short duration or of high frequency

Remote operation

Operation, visualization and maintenance with PC and FieldCare PC configuration software.

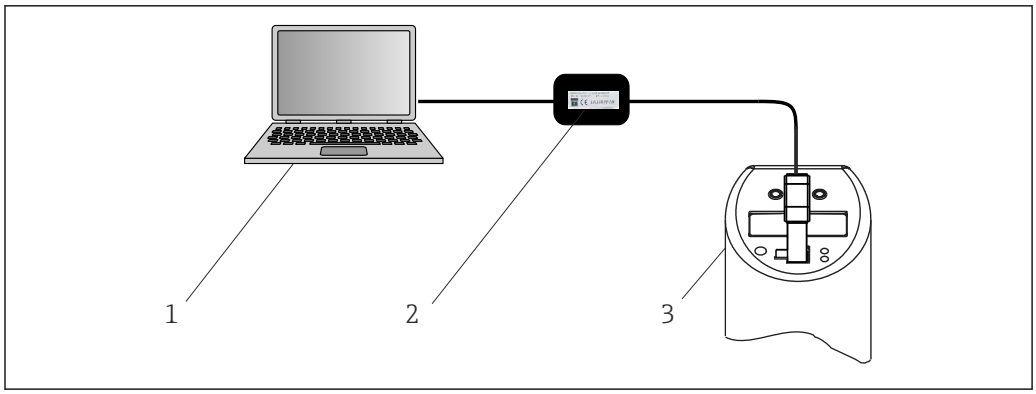

11 Operation, visualization and maintenance with PC and configuration software

1 PC with FieldCare, ReadWin configuration software
2 Configuration kit TXU10-AA or FXA291 with USB port
3 Industrial or hygienic device version

In addition to the operation options listed in the previous "Onsite operation" section, further information about the device is available via the FieldCare configuration software:

Function group	Function (display)	Description
SERV (service function)	Switching operations 1 Switching operations 2, optional	Number of changes in the switching state for switch output 1; optionally for switch output 2
INFO (device information)	TAG 1 TAG 2, optional	Tagging, 18-digit
	Order code	Order code
	Serial number	Device serial number
	Sensor serial number	Sensor serial number
	Electronics serial number	Electronics serial number
	Device version	Displays overall version
	Hardware revision	Hardware version
	Software revision	Software version

Certificates and approvals

Current certificates and approvals for the product are available at www.endress.com on the relevant product page:

1. Select the product using the filters and search field.
2. Open the product page.
3. Select **Downloads**.

Hygiene standard

- EHEDG Certificate, Type EL CLASS I. EHEDG-certified/tested process connections.
- 3-A certificate authorization no. 1144, 3-A Sanitary standard 74-07. Listed process connections.
- FDA-compliant.
- All surfaces in contact with the medium are free from materials derived from bovine animals or other livestock (ADI/TSE).

Materials in contact with food/product (FCM)

The process contact parts (FCM) are in conformity with the following European Regulations:
- Regulation (EC) No 1935/2004, on materials and articles intended to come into contact with food, article 3, paragraph 1, article 5 and 17.
- Regulation (EC) No 2023/2006 on good manufacturing practice for materials and articles intended to come into contact with food.
- Regulation (EU) No 10/2011 on plastic materials and articles intended to come into contact with food.

Ordering information

Detailed ordering information is available from your nearest sales organization www.addresses.endress.com or in the Product Configurator at www.endress.com:

1. Select the product using the filters and search field.
2. Open the product page.
3. Select **Configuration**.

Product Configurator - the tool for individual product configuration
- Up-to-the-minute configuration data
- Depending on the device: direct input of information specific to the measuring point, such as the measuring range or operating language
- Automatic verification of exclusion criteria
- Automatic creation of the order code and its breakdown in PDF or Excel output format
- Ability to order directly in the Endress+Hauser Online Shop

Accessories

Device-specific accessories

Rubber cover flap for interface cable

Rubber cover flap for interface cable	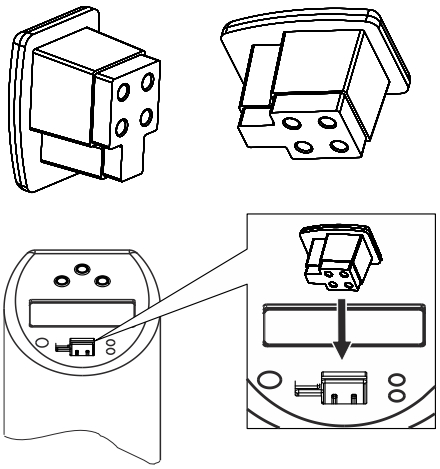

Welding boss with sealing taper

▪ Collar welding boss movable with sealing taper, washer and pressure screw G½" ▪ Material of parts in contact with the process: 316L, PEEK ▪ Max. process pressure 10 bar (145 psi)	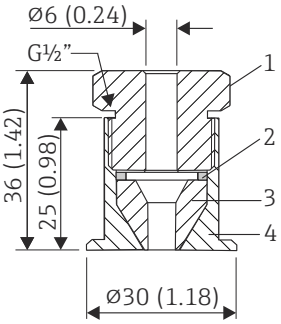 *12 Dimensions in mm (in)* *1 Pressure screw, 303/304* *2 Washer, 303/304* *3 Sealing taper, PEEK* *4 Collar welding boss, 316L*

Collar welding boss

▪ Collar welding boss movable with sealing taper and washer ▪ Material of parts in contact with the process: 316L, PEEK ▪ Max. process pressure 10 bar (145 psi)	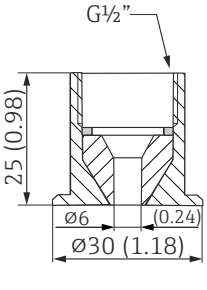 *13 Dimensions in mm (in)*

Compression fitting

- Movable clamping ring, various process connections
- Material of compression fitting and parts in contact with the process: 316L

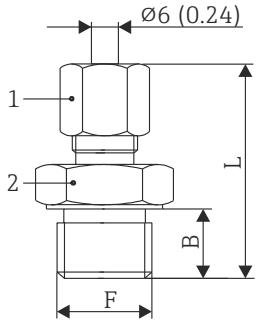

14 Dimensions in mm (in)

1 AF14

Version	F in mm (in)		L in mm (in)	B in mm (in)	Clamping ring material	Max. process temperature	Max. process pressure
TA50	G½"	AF 27	47 mm (1.85 in)	15 mm (0.6 in)	SS316 [1]	800 °C (1 472 °F)	40 bar at 20 °C (580 psi at 68 °F)
				20 mm (0.8 in)	PTFE [2]	200 °C (392 °F)	5 bar at 20 °C (72.5 psi at 68 °F)
	G¾"	AF 32	63 mm (2.48 in)	20 mm (0.8 in)	SS316 [1]	800 °C (1 472 °F)	40 bar at 20 °C (580 psi at 68 °F)
					PTFE [2]	200 °C (392 °F)	5 bar at 20 °C (72.5 psi at 68 °F)
	G1"	AF 41	65 mm (2.56 in)	25 mm (0.98 in)	SS316 [1]	800 °C (1 472 °F)	40 bar at 20 °C (580 psi at 68 °F)
					PTFE [2]	200 °C (392 °F)	5 bar at 20 °C (72.5 psi at 68 °F)
	NPT½"	AF 22	50 mm (1.97 in))	20 mm (0.8 in)	SS316 [1]	800 °C (1 472 °F)	40 bar at 20 °C (580 psi at 68 °F)
	R½"	AF 22	52 mm (2.05 in)	20 mm (0.8 in)	PTFE [2]	200 °C (392 °F)	5 bar at 20 °C (72.5 psi at 68 °F)
	R¾"	AF 27	52 mm (2.05 in)	20 mm (0.8 in)	PTFE [2]	200 °C (392 °F)	5 bar at 20 °C (72.5 psi at 68 °F)

1) SS316 clamping ring: can only be used once. Once released the compression fitting cannot be repositioned on the thermowell. Fully adjustable immersion length on initial installation.
2) PTFE/Elastosil® clamping ring: reusable; once loosened, the compression fitting can be moved up or down on the thermowell. Fully adjustable immersion length.

Communication-specific accessories

Coupling; connecting cable

Accessories	Description
▪ Coupling M12x1; straight ▪ Connection to M12x1 housing connector ▪ Materials: body PA, coupling nut CuZn, nickel-plated ▪ Degree of protection (fully locked): IP67	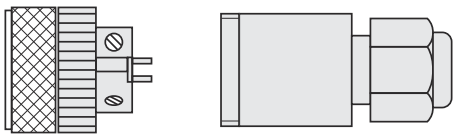 A0035843

Accessories	Description
▪ M12x1 coupling; elbowed, for termination of connecting cable by user ▪ Connection to M12x1 housing connector ▪ Body materials PBT/PA ▪ Coupling nut GD-Zn, nickel-plated ▪ IP67 degree of protection (fully locked) ▪ Voltage: max. 250 V ▪ Current carrying capacity: max. 4 A ▪ Temperature: −40 to 85 °C (−40 to 185 °F)	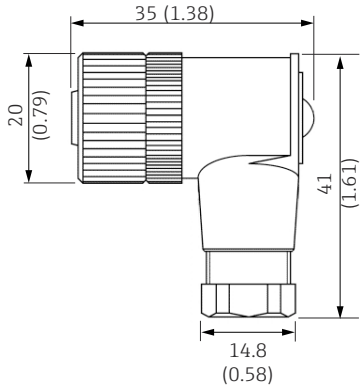

Accessories	Description
▪ PVC cable, 4 x 0.34 mm² (22 AWG) with M12x1 coupling nut made of epoxy coated zinc, straight socket contact, screw plug, 5 m (16.4 ft) ▪ IP69K protection (optional) ▪ Voltage: max. 250 V ▪ Current carrying capacity: max. 4 A ▪ Temperature: −20 to 105 °C (−4 to 221 °F) Wire colors: ▪ 1 = BN brown ▪ 2 = WH white ▪ 3 = BU blue ▪ 4 = BK black	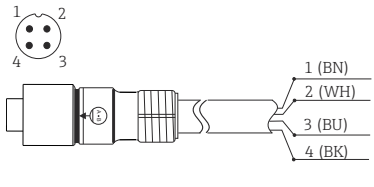

Accessories	Description
▪ PVC cable, 4 x 0.34 mm² with M12x1 coupling, with LED, elbowed ▪ 316L screw plug, length 5 m (16.4 ft), specially for hygiene applications ▪ Degree of protection (fully locked): IP69K **Display:** ▪ gn: device is operational ▪ ye1: switch status 1 ▪ ye2: switch status 2 Not suitable for 4 to 20 mA analog output.	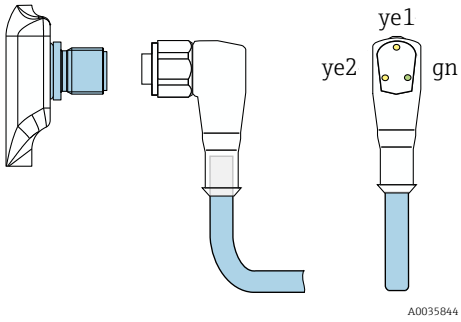

Configuration kit

- Configuration kit for PC-programmable transmitters;
  Configuration software and interface cable for PC with USB port and 4-pin post connector
  Order code: **TXU10-AA**
- "Commubox FXA291" configuration kit with interface cable for PC with USB port. Intrinsically safe CDI interface (Endress+Hauser Common Data Interface) for transmitters with 4-pin post connector. Suitable configuration software is FieldCare for example.
  Order code: **FXA291**

Configuration software

The ReadWin 2000 and FieldCare 'Device Setup' configuration programs can be downloaded free of charge directly from the Internet at the following addresses:

- www.endress.com/readwin
- www.endress.com/fieldcare

System components

RN series active barrier

Single- or two-channel active barrier for safe separation of 0/4 to -20 mA standard signal circuits with bidirectional HART transmission. In the signal duplicator option, the input signal is transmitted to two galvanically isolated outputs. The device has one active and one passive current input; the outputs can be operated actively or passively.

For more information, please refer to: www.endress.com

Process indicators from the RIA product family

Easily readable process indicators with various functions: loop-powered indicators for displaying 4-20 mA values, display of up to four HART variables, process indicators with control units, limit value monitoring, sensor power supply, and galvanic isolation.

Universal application thanks to international hazardous area approvals, suitable for panel mounting or field installation..

For more information, please refer to: www.endress.com

Data Manager of the RSG product family

Data Managers are flexible and powerful systems to organize process values. Up to 20 universal inputs and up to 14 digital inputs for direct connection of sensors, optionally with HART, are available as an option. The measured process values are clearly presented on the display and logged safely, monitored for limit values and analyzed. The values can be forwarded via common communication protocols to higher-level systems and connected to one another via individual plant modules.

For more information, please refer to: www.endress.com

Documentation

The following document types are available in the Downloads area of the Endress+Hauser website (www.endress.com/downloads), depending on the product configuration:

Document type	Purpose and content of the document
Technical Information (TI)	**Planning aid** This document contains all the technical data on the product and provides an overview of everything that can be ordered with the product.
Brief Operating Instructions (KA)	**Quick guide to obtaining the first measured value** The Operating Instructions contain all the essential information about the product from incoming acceptance to initial commissioning.
Operating Instructions (BA)	**Reference** The Operating Instructions contain the information that is required in the various phases of the life cycle of the product: From product identification, incoming acceptance and storage, to mounting, connection, operation and commissioning through to troubleshooting, maintenance and disposal.
Description of Device Parameters (GP)	**Reference for parameters** The document contains detailed explanations of readable or configurable parameters in the product. The description is aimed at those who work with the product over its entire life cycle and perform specific configurations.
Safety Instructions (XA)	Safety Instructions for electrical equipment in hazardous areas are supplied with the product depending on the approval. These are an integral part of the Operating Instructions. The nameplate indicates the Safety Instructions (XA) that are relevant to the product.
Supplementary device-dependent documentation (SD/FY)	Always comply strictly with the instructions in the relevant supplementary documentation. The supplementary documentation is an integral part of the product documentation.

LENNTECH
WATER TREATMENT SOLUTIONS
info@lenntech.com Tel. +31-152-610-900
www.lenntech.com Fax. +31-152-616-289

Endress+Hauser
People for Process Automation